AGENDA - JOINT PUBLIC HEARING OF THE CITY COUNCIL AND THE PLANNING AND ZONING COMMISSION OF THE CITY OF PEARLAND, TEXAS, TO BE HELD FEBRUARY 15, 2010, AT 6:30 P.M., IN THE COUNCIL CHAMBERS, CITY HALL, 3519 LIBERTY DRIVE, PEARLAND, TEXAS

I. CALL TO ORDER

II. PURPOSE OF HEARING

Conditional Use Permit No. CUP 2009-19

A request of Clear Wireless, LLC, applicant for PMSV Broadway West Storage, owner, for a conditional use permit to allow the addition of and antenna or co-location of a cellular antenna in the General Commercial (GC) Zoning District, on the following described property, to wit:

Legal Description : Approximately 8.870 acres (386,368 square feet) more or less being that same certain tract conveyed from Eastgroup-LNH Corporation to Palms Properties. L.L.C. as recorded in file No. 96-021151, Official Records of Brazoria County, Texas, same being out of Lot 20, Allison Richey Gulf Coast Home Company's Suburban Gardens Subdivision, as recorded in Volume 2, Page 107, Plat Records of Brazoria County, Texas, said 8.870 Acre Tract being situated in the H.T. & B. R.R. Co. Survey, Section 85, Abstract No. 304, in Brazoria County. Texas.

General Location: 2850 Wooten Rd., Pearland TX

III. APPLICATION INFORMATION AND CASE SUMMARY

A. STAFF REPORT
B. APPLICANT PRESENTATION

IV. PERSONS WISHING TO SPEAK FOR OR AGAINST THE PROPOSED REQUEST

V. COUNCIL/PLANNING COMMISSION/STAFF DISCUSSION

VI. ADJOURNMENT

This site is accessible to disabled individuals. For special assistance, please call Young Lorfing, City Secretary, at 281-652-1655 prior to the meeting so that appropriate arrangements can be made.

JOINT PUBLIC HEARING AGENDA ITEM
MEETING OF JANUARY 18, 2010

Conditional Use Permit No. CUP 2009-19

A request of Clear Wireless, LLC., applicant for PMSV Broadway West Storage, owners, for a conditional use permit to allow the addition of a cellular antenna in the General Commercial (GC) Zoning District, on the following described property, to wit:

Legal Description: Approximately 8.870 acres (386,368 square feet) more or less being that same certain tract conveyed from Eastgroup-LNH Corporation to Palms Properties. L.L.C. as recorded in file No. 96-021151, Official Records of Brazoria County, Texas, same being out of Lot 20, Allison Richey Gulf Coast Home Company's Suburban Gardens Subdivision, as recorded in Volume 2, Page 107, Plat Records of Brazoria County, Texas, said 8.870 Acre Tract being situated in the H.T. & B. R.R. Co. Survey, Section 85, Abstract No. 304, in Brazoria County. Texas.

General Location: Located at 2850 Wooten Road, Pearland TX

APPROVAL PROCESS: After this Joint Public Hearing, the requested zone change application will be considered as follows:

Planning and Zoning Commission: February 15, 2010*
City Council for First and Only Reading: February 22,, 2010*

(*dates subject to change if item is tabled)

SUMMARY: The applicant is requesting approval of a Conditional Use Permit that would allow the co-location of an antenna on an existing 145 foot tower. The Co-location of the antenna is approximately 115 feet high with the proposed installation of a 7' X 7' (49 square feet) equipment cabinet that will be mounted on an elevated platform instead of a concrete slab. The applicant also proposes telephone and electric utilities for the ground equipment as stated in the letter of intent.

Cellular Towers in General Commercial (GC) Zoning District require a conditional use permit. This site does not have a conditional use permit in place. Once this CUP is approved, future additions of antenna or co-locations would not require additional zoning approval.

The existing site is approximately a 386,368 square foot lot with chain link perimeter fencing surrounding a 3,000 square foot area where the tower is located. There are several accessory buildings surrounding the existing 145 foot cellular communications tower within the fenced area. Currently, there is not any landscaping in this area, as it is located behind a small strip center to the south, off of Broadway. A large detention pond is located to the north of the cell tower, and a smaller detention pond is located to the east portion of the property off of Wooten Rd.

SURROUNDING ZONING AND LAND USES:

	Zoning	Land Use
North	Neighborhood Services (NS)	Detention Pond
South	General Business (GB)	Strip Mall
East	Neighborhood Services (NS)	Detention Pond
West	Extra Territorial Jurisdiction (ETJ)	Wal-Mart

CONFORMANCE TO THE UNIFIED DEVELOPMENT CODE (UDC): The subject property is currently zoned as General Commercial (GC). The minimum lot size for the GC district is 22,500 square feet, the minimum lot width is 150 feet, and the minimum lot depth is 125 feet. The subject property meets these minimum requirements, as the property is approximately 8.870 acres. This is a flag shaped lot with an access off of Broadway.
The applicant will be required to comply with all other requirements of the Unified Development Code.

PLATTING STATUS: The Broadway West Plat was approved on March 1, 1999 and later recorded on May 14, 1999. The property owner then sold approximately 3,000 square feet of the lot via warranty deed to GTP Acquisition Partners II, LLC. on September 30, 2005 without access to this lot.

CONFORMANCE TO THE COMPREHENSIVE PLAN: The Comprehensive Plan (2004 update adopted on July 26, 2004) recommends “Business Park” for the subject property and the surrounding properties. The Comprehensive Plan further indicates that the appropriate uses for that zoning district are Nonresidential-Large office complex/campuses and retail development. The area was zoned in accordance with the 2004 update; therefore the current General Commercial (GC) Zone conforms to the Comprehensive Plan.

CONFORMANCE TO THE THOROUGHFARE PLAN: The subject property has frontage on Broadway, a major thoroughfare with an ultimate right-of-way of 120 feet. The applicant has had the property platted, but it may be necessary to replat and all necessary dedications can be made at the time of platting.

AVAILABILITY OF UTILITIES: The subject parcel is served by public water and sewer.

IMPACT ON EXISTING AND FUTURE DEVELOPMENT: The proposed conditional use permit for addition of an antenna or co-location of an antenna should not have a significant impact on the surrounding properties. AT &T and T-Mobile are currently operating at this existing cellular communications tower. Access to this cellular communications tower is through a driveway off of Broadway.

An electrical permit was approved and issued to AT&T at 2850 Wooten Rd on July 23, 2008 and a permit for a commercial addition/alteration was approved for T-Mobile at 2854 Wooten Rd. on January 16, 2008. These two applications for permits were not forwarded to the Planning Department for review and were subsequently approved. In addition, there is an approved special use permit for mini storage located at 10401 Broadway Ord. 509-555 adjacent to the cellular tower.

The Broadway West Plat was approved on March 1, 1999 and then recorded on May 14, 1999. The property owner then sold approximately 3,000 square feet of the lot via warranty deed to GTP Acquisition Partners II, LLC. on September 30, 2005. Although the ground equipment is not screened and there is no landscaping, due to the location behind the strip mall and mini-storage, the cellular tower cannot be seen from Broadway.

ADDITONAL COMMENTS: No additional comments received.

SITE PLAN CONSIDERATIONS: A site plan was submitted showing the existing cell tower and existing antenna. Engineering calculations have also been submitted showing that the addition of an antenna on the existing tower will not cause the existing cellular tower to fail.

PUBLIC NOTIFICATION: Public notice/comment forms were mailed to property owners within 200 feet of the subject property under consideration. A legal notice of public hearing was published in the local newspaper, and a Zoning Sign was placed on the subject property.

OPPOSITION TO OR SUPPORT OF PROPOSED REQUEST: Staff has not received any comments either in opposition to or in support of the proposed zone change request.

STAFF RECOMMENDATION: Staff recommends approval of the Conditional Use Permit, for the following reasons:

1. The proposed facility should not have a significant negative impact on the surrounding properties and developments.

2. The proposed co-location of antenna is encouraged in the Unified Development Code with an approved Conditional Use Permit.

3. The proposed use with an approved Conditional Use Permit would be in conformance with the Comprehensive Plan.

SUPPORTING DOCUMENTS:

- Zone Change Application
- Location Map
- Property Ownership Map
- Property Owner Notification List
- Zoning Map
- Future Land Use Plan
- Aerial Photograph
- Other Maps and Related Documents

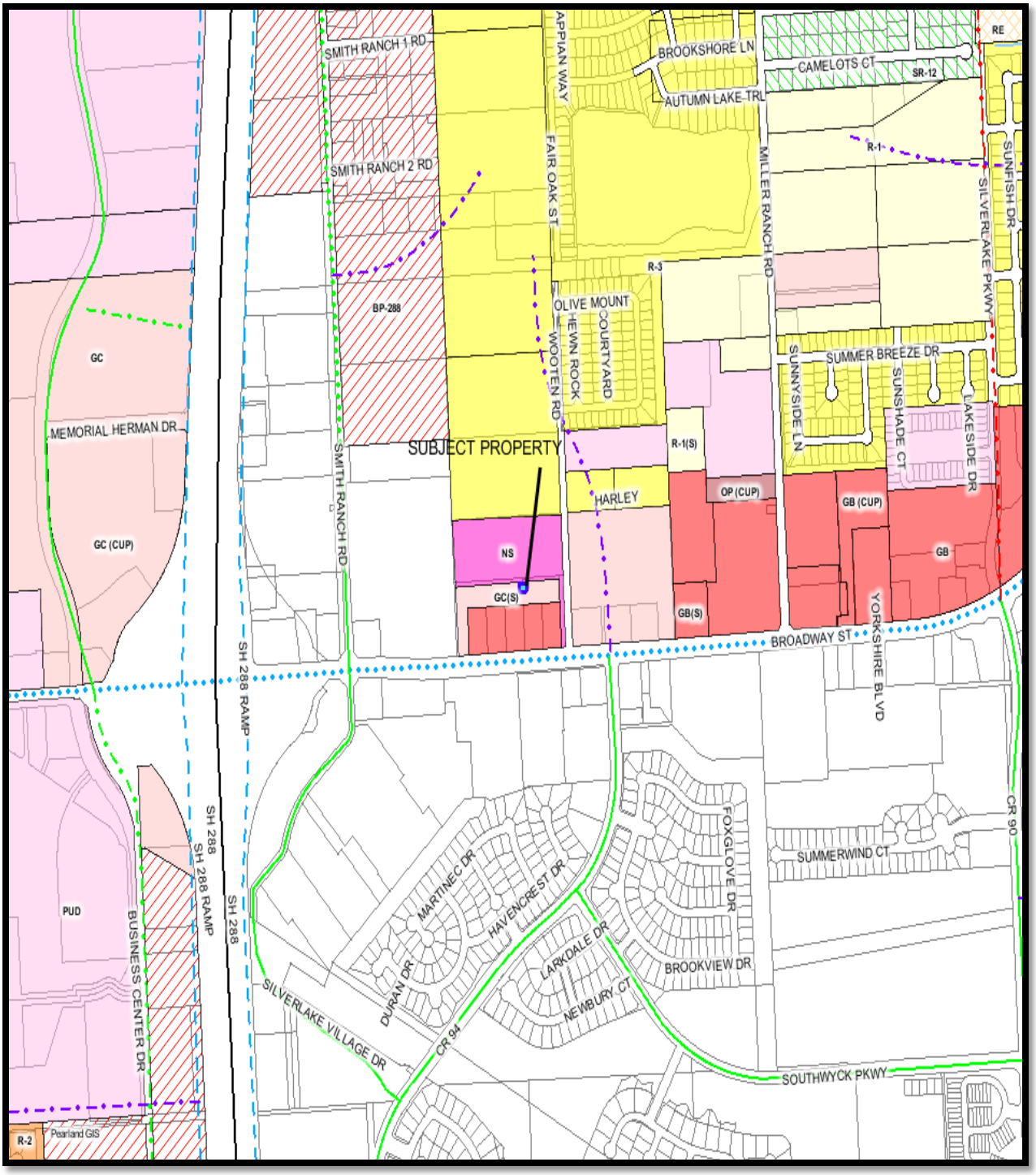

VICINITY MAP

CONDITIONAL USE PERMIT 2009-19

2850 WOOTEN ROAD, PEARLAND, TEXAS

↑
NORTH

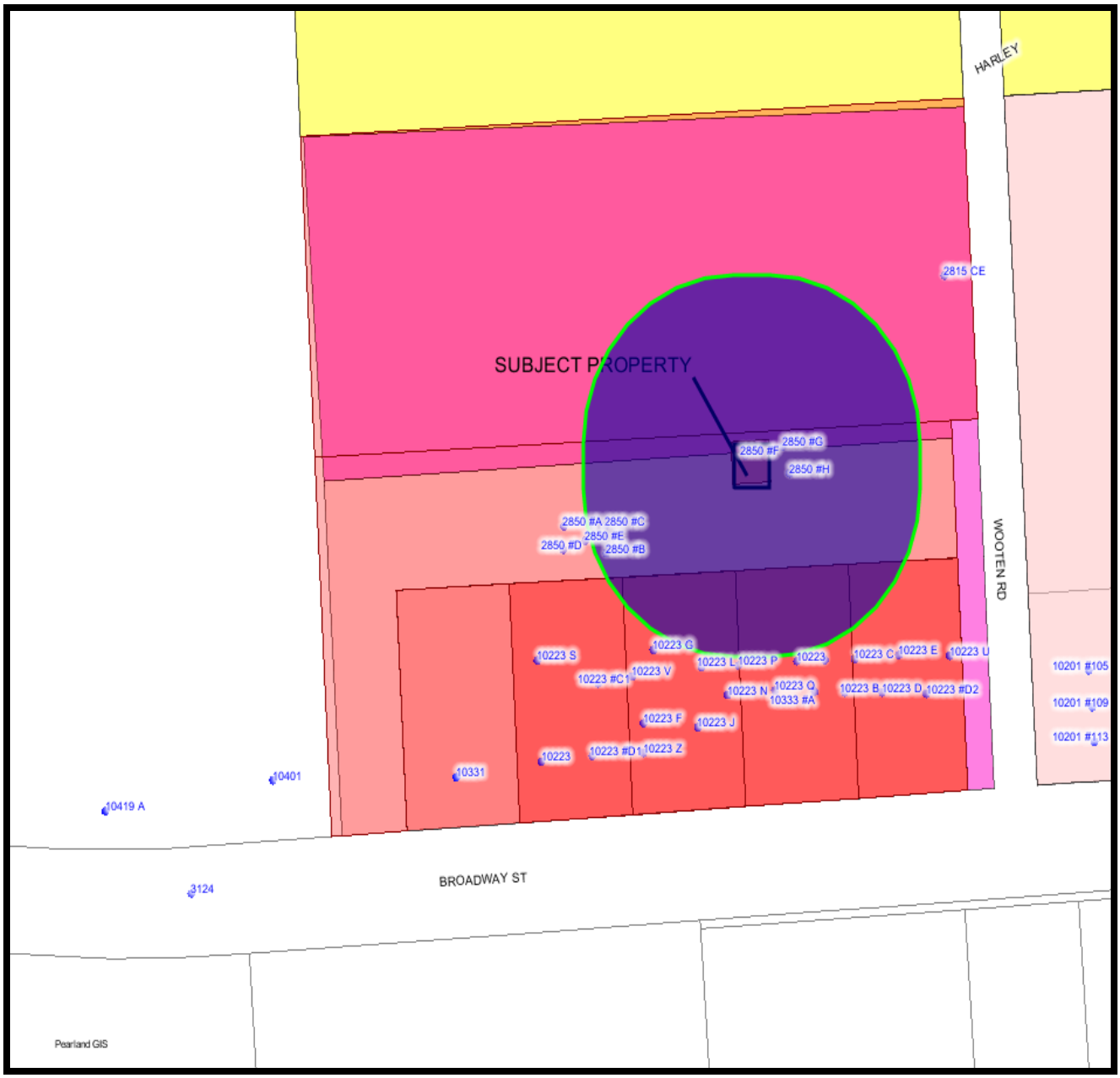

ABUTTER MAP

CONDITIONAL USE PERMIT 2009-19

2850 WOOTEN ROAD, PEARLAND, TEXAS

↑
NORTH

CUP APPLICATION NO. 2009-19
2850 WOOTEN ROAD
PROPERTY OWNERS NOTIFICATION LIST

CHERRY CARL J & BARBARA L TRUST	4503 CHERRY LN	SANTA FE	TX	77517
GTP ACQUISITION PARTNERS II LLC	1801 CLINT MOORE RD	BOCA RATON	FL	33487
PMSV BROADWAY WEST STORAGE LP	10575 WESTOFFICE DR	HOUSTON	TX	77042
WMPT PEARLAND LP	661 UNIVERSITY BLVD STE 100	JUPITER	FL	33458
WMPT PEARLAND LP	661 UNIVERSITY BLVD STE 100	JUPITER	FL	33458
WMPT PEARLAND LP	661 UNIVERSITY BLVD STE 100	JUPITER	FL	33458
WMPT PEARLAND LP	661 UNIVERSITY BLVD STE 100	JUPITER	FL	33458

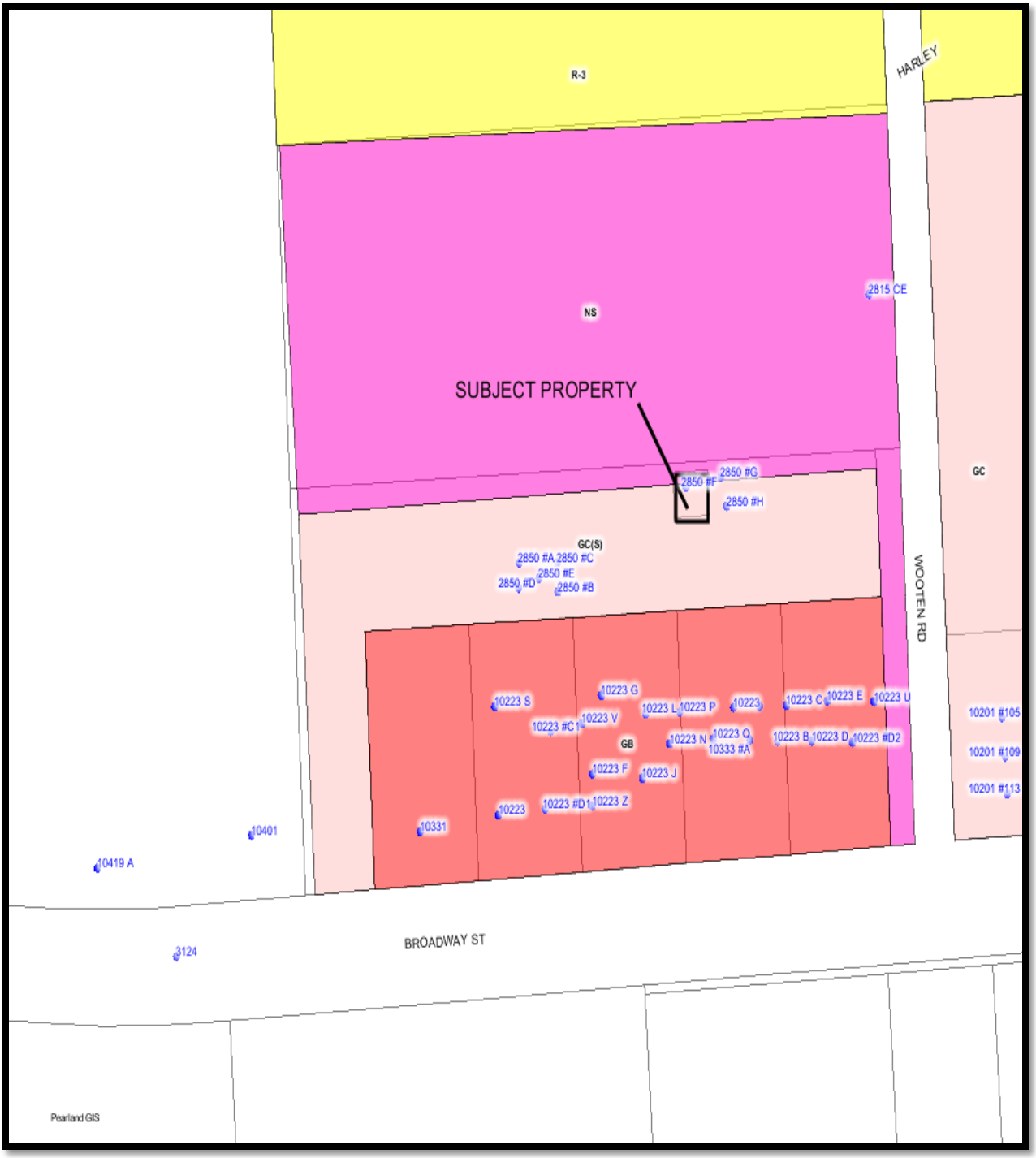

ZONING MAP

CONDITIONAL USE PERMIT 2009-19

2850 WOOTEN ROAD, PEARLAND, TEXAS

↑
NORTH

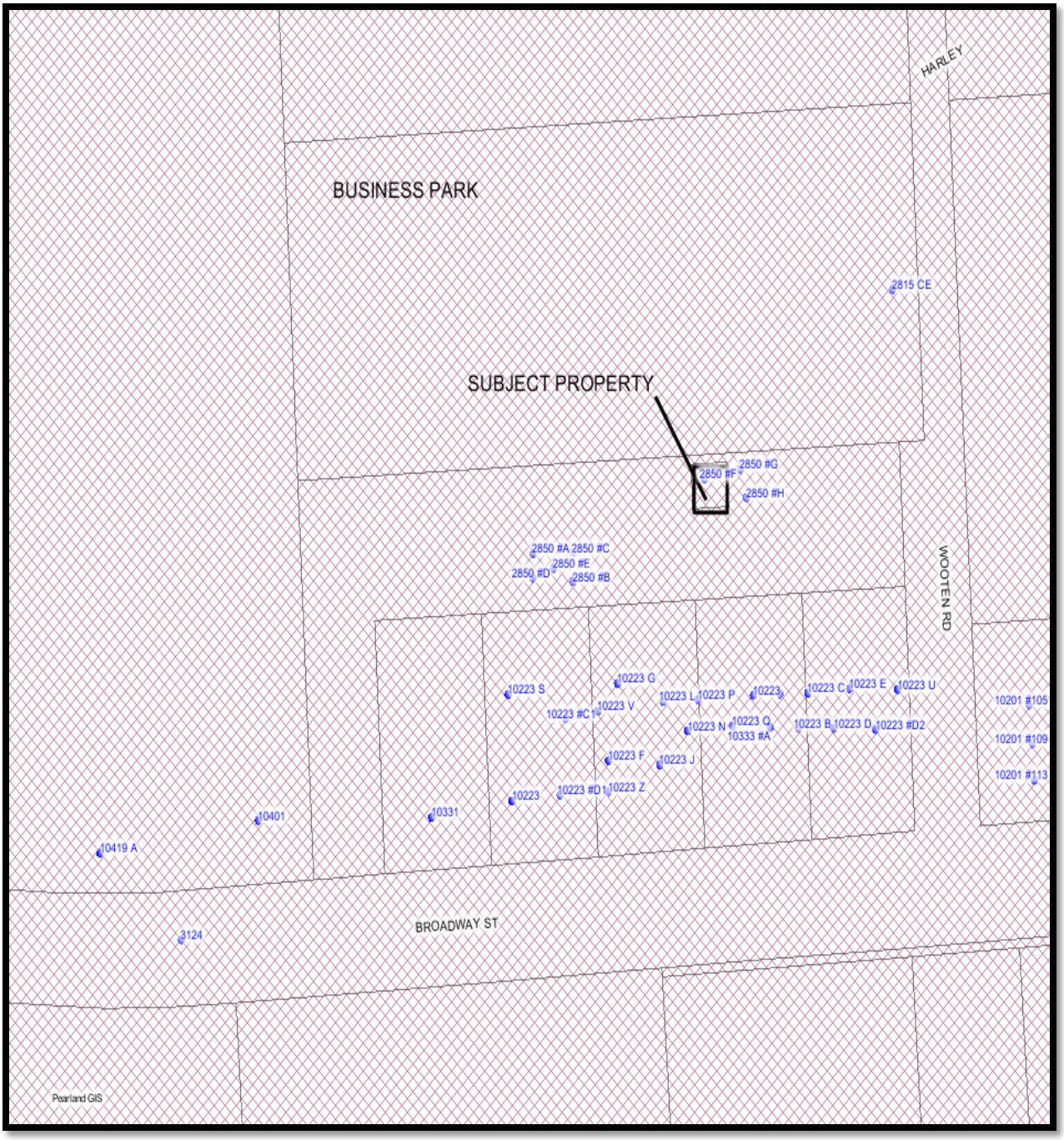

FUTURE LAND USE MAP

CONDITIONAL USE PERMIT 2009-19

2850 WOOTEN ROAD, PEARLAND, TEXAS

↑
NORTH

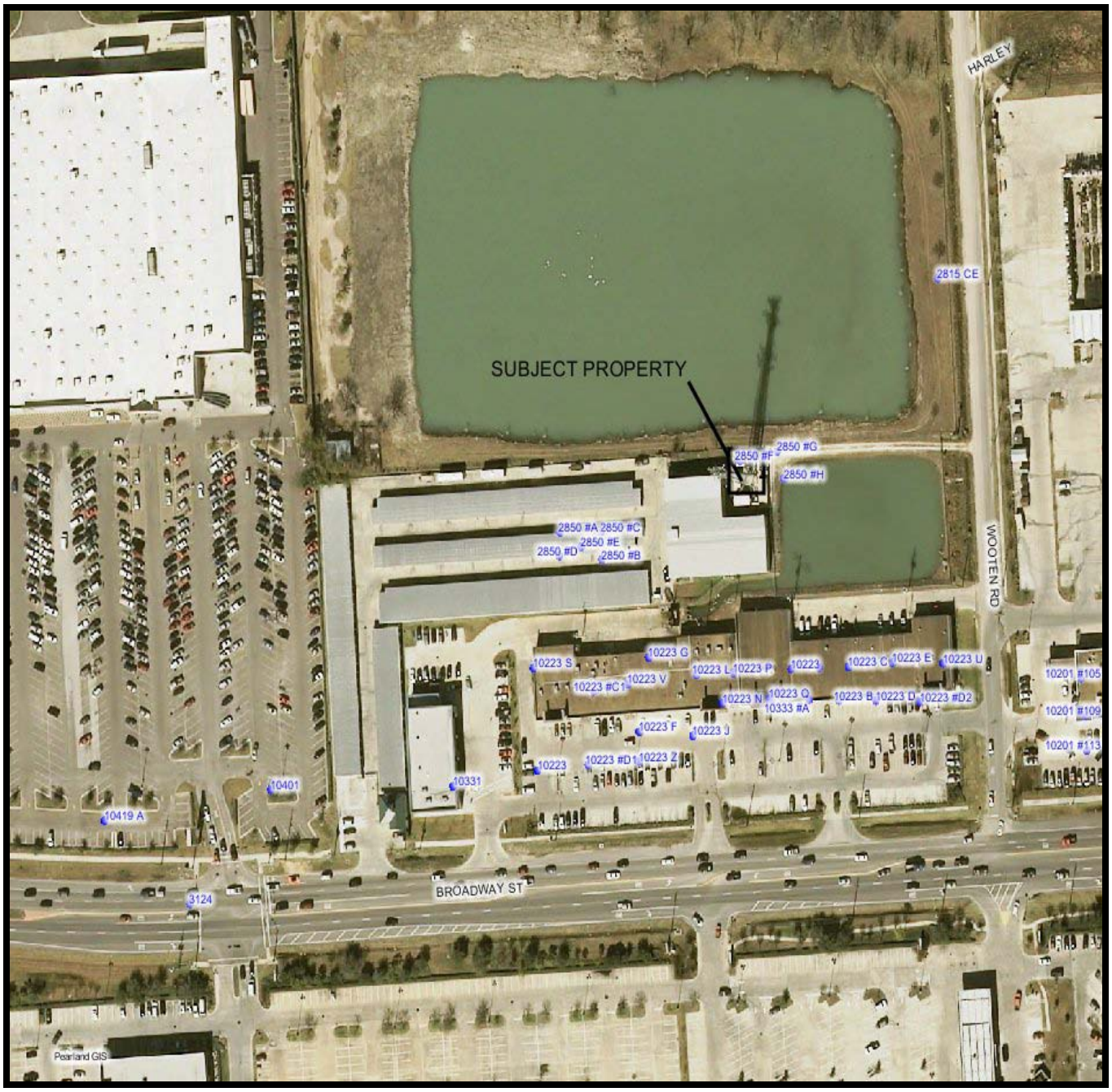

AERIAL MAP

CONDITIONAL USE PERMIT 2009-19

2850 WOOTEN ROAD, PEARLAND, TEXAS

↑

NORTH

City of Pearland
Community Development
3523 Liberty Drive
(Community Center)
Pearland, Texas 77581
281-652-1768
281-652-1702 fax
www.cityofpearland.com

APPLICATION FOR A CONDITIONAL USE PERMIT (CUP)

Conditional Use Permit Request for: Collocation of antenna and equipment on existing communications tower.
(list proposed use from the Table of Uses of the UDC)

Current Zoning District: GC - General Commercial

Property Information:

Address or General Location of Property: TX-HOU0290
2850 Wooten Rd, Pearland, TX 77581

Tax Account No. 524090

Subdivision: Broadway West (A0304 HT&BRR) Lot: _____ Block: _____

A complete application must include all information shown on the Application Checklist attached to this application.

ADJACENT PROPERTY OWNER INFORMATION:

NAME PMSV BROADWAY WEST STORAGE
ADDRESS 10575 WESTOFFICE DR
CITY Houston STATE TX ZIP 77581
PHONE(713) 436-2200
FAX( )
E-MAIL ADDRESS

APPLICANT INFORMATION:

NAME Clear Wireless, LLC
ADDRESS 3300 Carillion Point
CITY Kirkland STATE WA ZIP 98033
PHONE(281) 580-4100
FAX(281) 580-4108
E-MAIL ADDRESS blake.griggs@powderriverdev.com

ADJACENT *Property owner ~~must be~~ is the current owner of the ADJACENT property at the time of submittal of the application, and not the party that has the property under contract.

As owner and applicant, I hereby request approval of the above described request as provided for by the Unified Development Code of the City of Pearland.

ADJACENT Owner's Signature: _____, President of General Partner Date: 1/20/2010

ADJACENT Agent's Signature: Blake Griggs Date: 1/19/2010

OFFICE USE ONLY:

FEES PAID:	DATE PAID:	RECEIVED BY:	RECEIPT NUMBER:

Application No.

Application for a

Conditional Use Permit

To the

City of Pearland

by

Clear Wire LLC

for

Collocation on an Existing Tower

Located at:

2850 Wooten Road
(Clearwire ID: TX-HOU0290)

Table of Contents

I. CUP Application 3

II. Application Exhibits 7

- A. Legal Description 11
  1. Metes and Bounds Description
  2. Plat of Property
- B. Parcel Map 14
- C. Letter of Intent 16
- D. Check for Application Fee 18
- E. Site Plan 20
- F. Acknowledgement of Posting 25

III. Supplemental Information 26

- A. Maps 26
  1. Zoning
  2. Land Use
  3. County Appraisal
- B. Photos 30
- C. Property Records 33
  1. Appraisal record
  2. Deed
- D. Structural Analysis 37
- E. Lease Agreement 43
- F. Contact Information 54

IV. Code Response

- A. Tower Ordinance 55
- B. GC Zone District 58
- C. Site Development 62

City of Pearland
Community Development
3523 Liberty Drive
(Community Center)
Pearland, Texas 77581
281-652-1768
281-652-1702 fax
www.cityofpearland.com

APPLICATION FOR A CONDITIONAL USE PERMIT (CUP)

Conditional Use Permit Request for: Collocation of antenna and equipment on existing communications tower.
(list proposed use from the Table of Uses of the UDC)

Current Zoning District: GC - General Commercial

Property Information:

Address or General Location of Property: TX-HOU0290
2850 Wooten Rd, Pearland, TX 77584

Tax Account No. 522376

Subdivision: BROADWAY WEST (A0304 HT&BRR) Lot: 1A Block:

A complete application must include all information shown on the Application Checklist attached to this application.

PROPERTY OWNER INFORMATION:

NAME GTP ACQUISITION PARTNERS II LLC
ADDRESS PO BOX 811510
CITY Boca Raton STATE FL ZIP 33481
PHONE(561) 886-5879
FAX(561) 982-7479
E-MAIL ADDRESS vvelarde@gtpsites.

APPLICANT INFORMATION:

NAME Clear Wireless, LLC
ADDRESS 3300 Carillion Point
CITY Kirkland STATE WA ZIP 98033
PHONE(281) 580-4100
FAX(281) 580-4108
E-MAIL ADDRESS blake.griggs@powderriverdev.com

*Property owner must be the current owner of the property at the time of submittal of the application, and not the party that has the property under contract.

As owner and applicant, I hereby request approval of the above described request as provided for by the Unified Development Code of the City of Pearland.

Owner's Signature: Terry Arnaut, SVP Date: 12/21/09

Agent's Signature: Blake Griggs Date: 12/21/0

OFFICE USE ONLY:

FEES PAID:	DATE PAID:	RECEIVED BY:	RECEIPT NUMBER:

Application No.

APPLICATION CHECKLIST FOR THE FOLLOWING
• Conditional Use Permits (CUP)

☐ Application, filled out completely, and signed by the owner of the property to be considered for the conditional use permit

☐ Metes and Bounds Description, Survey, or a Plat of the property.

☐ Parcel map, printed from the City of Pearland website, indicating the location and boundaries of the subject property.

☐ Letter of Intent, explaining the conditional use permit request in detail, specifying proposed uses, specific operations of the use, square footage of buildings, unique characteristics of the property, and any other necessary information

☐ Application fee of $250.00, by cash, check made payable to the City of Pearland, or credit card (Visa and MasterCard only)

☐ Site Plan or Plot Plan showing the proposed layout of the subject property, including any proposed buildings, parking, landscaped areas, detention ponds, fences, and any other relevant information

☐ Acknowledgement of the sign to be posted on the property 10 days prior to the public hearing

POSTING OF ZONING NOTIFICATION SIGNS ON PROPERTY UNDER CONSIDERATION FOR A ZONE CHANGE (OR CONDITIONAL USE PERMIT)

Any person, firm or corporation requesting a zoning change, a conditional use permit (CUP), or a variance shall be required to erect and maintain a sign(s), to be inspected by the City, upon the property for which a variance or zoning change has been requested.

Such sign(s) shall be located as follows:

(1) One (1) sign per street frontage shall be located within thirty feet (30') of the abutting street, or as determined by the City.

(2) So as to be clearly visible and readable from the public right-of-way and not obstructed in any manner.

(3) So as not to create a hazard to traffic on the public rights-of-way abutting the property.

(4) On the subject property at least ten (10) days prior to the hearing of such zoning change request by the Planning and Zoning Commission, and to remain continuously on said property until final action by the City Council or withdrawal of the case by the applicant. Removal of the sign by the applicant prior to a recommendation by the Planning and Zoning Commission and/or a final decision by the City Council shall constitute a withdrawal of the request.

(5) The signs shall be as follows:

- A minimum sign size of 2 feet by 3 feet, but no larger than 4 feet by 4 feet
- At least 2 feet above the ground
- Blue or black lettering that is a minimum of 3 inches by 1/2 inch, on a white background
- Message content as follows:

PROPOSED ZONE CHANGE
Contact City of Pearland
281-652-1768

***Signs must be professionally made; handwritten signs are not allowed.**

***Signs must be freestanding and cannot be attached to a tree, fence, or building.**

Additional Information:

- Upon making an application for a zoning change or conditional use permit, the applicant shall place sign(s) as required. The City shall inspect such sign(s) to ensure compliance as required by the UDC.

- After the zoning change or conditional use permit request is approved by the City Council, denied by the City Council, or withdrawn by the applicant, the applicant shall remove the sign from the area of the request within ten (10) days of such event.

- It shall be unlawful for anyone to remove, destroy, deface or obstruct the view of a sign which gives notice that a zoning change or conditional use permit has been requested.

- In the event the applicant shall fail to erect and/or maintain signs in accordance with this section, then the public hearing before the Planning and Zoning Commission/City Council shall be postponed to a date in the future, which would allow time for compliance.

- The erection of any sign required by this section shall not require a permit under Section 4.1.2.6 of this UDC.

- The owner or applicant shall promptly notify the Planning Department of any sign required by this section, which becomes lost, stolen or vandalized. The Planning and Zoning Commission shall have the power to decide whether or not there has been substantial compliance with the posting requirements in the case of lost, stolen or vandalized signs.

Exhibit A-1

Metes and Bounds Description of Property

Doc# 2006002708

Record & Return To:
Timothy J. Culver, esq.
Global Tower, LLC
1801 Clint Moore Road, Suite 215
Boca Raton, FL 33487

E4

SPECIAL WARRANTY DEED

GTP Site Name: PEARLAND #2
GTP Site ID: TX-5021

STATE OF FLORIDA }
} KNOW ALL MEN BY THESE PRESENTS
COUNTY OF PALM BEACH}

That Global Tower, LLC a Delaware limited liability company and having its principal place of business at 1801 Clint Moore Road, Boca Raton, FL 33487, (hereinafter called "Grantor"), for and in consideration of the sum of Ten and 00/100 dollars ($10.00) and other good and valuable consideration to it and hand paid in cash by GTP Acquisition Partners II, LLC, a Delaware limited liability company, with a principal place of business at 1801 Clint Moore Road, Boca Raton, Florida, (hereinafter called "Grantee" whether one or more), the receipt of which is hereby acknowledged, has GRANTED, SOLD AND CONVEYED and by these presents does GRANT, SELL AND CONVEY unto said Grantee the following described property located in BrazoriaCounty, TX described on the attached Exhibit A:

TO HAVE AND TO HOLD the above described premises, together with all and singular the rights and appurtenances thereto in anywise belonging unto the said Grantees, its successors, and assigns forever, and Grantor does hereby bind itself, its successors and assigns to WARRANT AND FOREVER DEFEND all and singular the said premise unto the said Grantee, its successors and assigns against every person whomsoever lawfully claiming or to claim the same or any part thereof, by, through or under Grantor but not otherwise.

DATED this 30 day of September, 2005.

Global Tower, LLC
A Delaware limited liability company

By: _____
Name: Marc C. Ganzi
Title: CEO

STATE OF FLORIDA

COUNTY OF PALM BEACH

I, Cynthia H. Reiss, a Notary Public of Broward County and State of Florida, do hereby certify that Marc C. Ganzi personally came before me and acknowledged that he is Chief Executive Officer of Global Tower LLC and that, as Chief Executive Officer, being authorized to do so, executed the foregoing instrument on behalf of said limited liability company.

Witness my hand and official stamp or seal this 30 day of September, 2005.

_____
Notary Public
Print Name: Cynthia H. Reiss
My Commission Expires: Commission #DD322701 Expires: May 24, 2008 Bonded Thru Atlantic Bonding Co., Inc.

[NOTARY SEAL]

EXHIBIT A

EXHIBIT "A"

TRACT I:

A parcel of land containing 0.0689 of an acre (3,000 square feet) more or less being out of Lot 1 of Broadway West as recorded in Volume 20, Page 307-308 of the Plat Records of Brazoria County, Texas, said 0.0689 of an acre tract being more particularly described by metes and bounds as follows:

COMMENCING at a found 5/8 inch iron rod in the said south line of Cherry Tract, for the said northwest corner of Wooten Road, same being the said northeast corner of Lot 1;

THENCE S 86 degrees 41' 12" W, with the said south line of the Cherry Tract, same being the said north line of Lot 1, a distance of 243.00 feet to a point;

THENCE, S 03 degrees 19' 30" E, crossing a portion of said Lot 1, a distance of 10 feet to a found 5/8 inch iron rod for the point of beginning;

THENCE, crossing said Lot 1, the following four (4) courses and distances:

S 03 degrees 19' 30" E, at a distance of 50.00 feet pass a found 5/8 inch iron rod, and a total distance of 60.00 feet to a set 5/8 inch iron rod;

S 86 degrees 41' 12" W, a distance of 50.00 feet to a set 5/8 inch iron rod;

N 03 degrees 19' 30" W, at a distance of 10.00 feet pass a found 5/8 inch iron rod, and a total distance of 60.00 feet to a found 5/8 inch iron rod, and

N 86 degrees 41' 12" E, a distance of 50.00 feet to the point of beginning and containing 0.0689 of an acre (3,000 square feet) of land more or less.

TRACT II - EASEMENT PROPERTY:

A parcel of land containing 0.0673 of an acre (2,930 square feet) more or less being out of Lot 1, Broadway West, as recorded in Volume 20, Page 307-308, Plat Records of Brazoria County, Texas, said 0.0673 of an acre (2,430 square feet) tract being situated in the H.T. & B. R.R. Co. Survey, Section 85, Abstract No. 304, in Brazoria County, Texas, and being more particularly described by metes and bounds as follows:

BEGINNING at a found 5/8 inch iron rod in the south line of that certain tract conveyed from Eastgroup-LNH Corporation to Carl and Barbara Cherry, as recorded in File No. 96-019754, Official Records of Brazoria County, Texas, same being the northwest corner of Wooten Road as dedicated by said Broadway West, and also being the northeast corner of said Lot 1, from which a found 5/8 inch iron rod in the centerline of said Wooten Road for the southeast corner of the said Cherry Tract bears N 86 degrees 41' 12" E, 35.00 feet;

THENCE, S 03 degrees 19' 30" E, with the west line of said Wooten Road, same being the east line of said Lot 1, a distance of 10.00 feet to a point;

THENCE, S 88 degrees 41' 12" W, crossing a portion of said Lot 1, at a distance of 10.00 feet pass the northeast corner of a detention easement, as shown on said Broadway West and then with the north line of said detention easement, at a distance of 243.00 feet pass the northwest corner of said detention easement and a total distance of 293.00 feet to a point;

THENCE, N 03 degrees 19' 30" W, continuing to cross a portion of said Lot 1, a distance of 10.00 feet to a point

Doc# 2006002708
Pages 4
01/13/2006 3:08PM
Official Records of
BRAZORIA COUNTY
JOYCE HUDMAN
COUNTY CLERK
Fees $28.00

Joyce Hudman

Exhibit A-2

Plat of Property

Existing Plat of Property

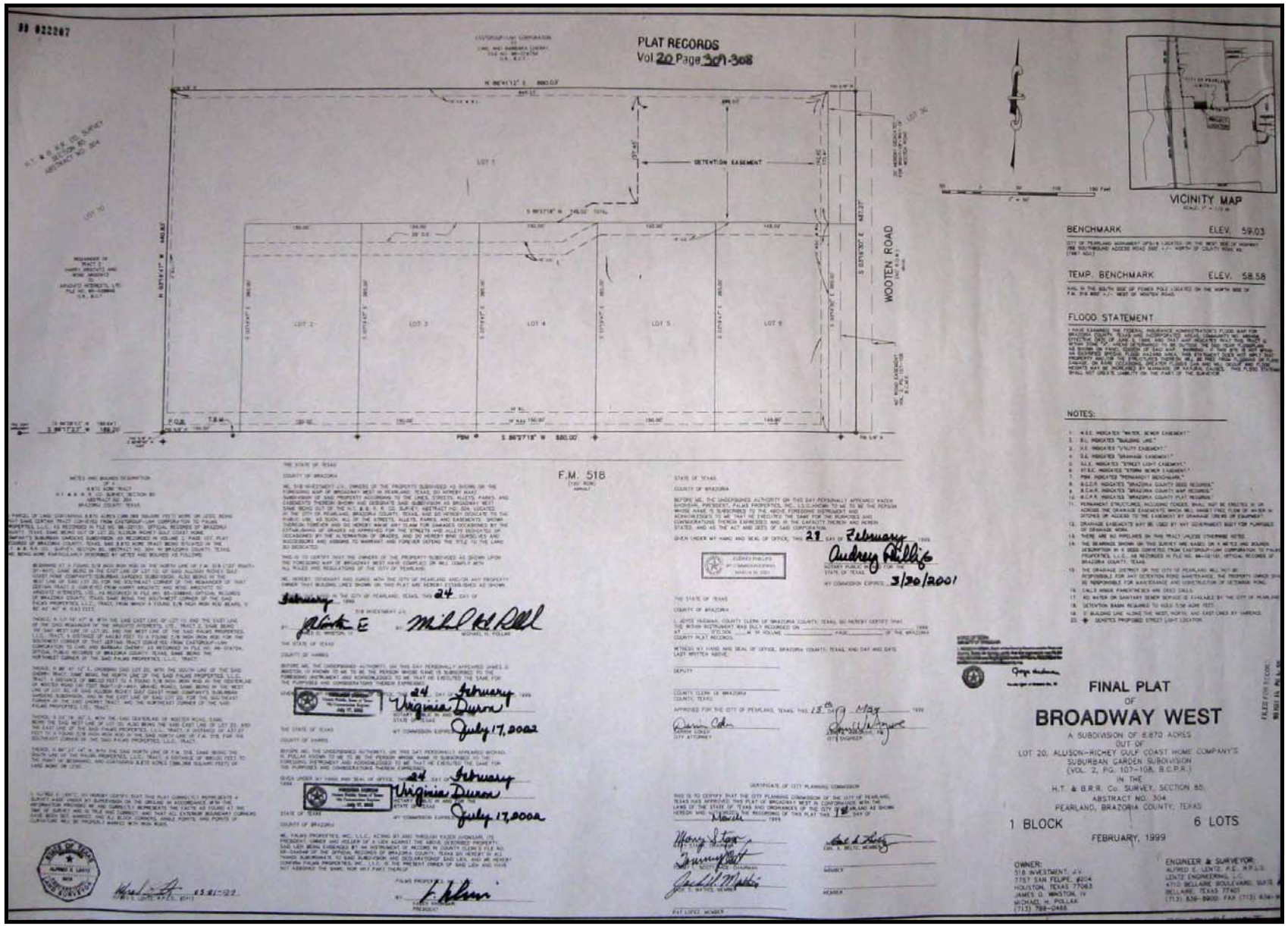

Exhibit B

Parcel Map from city website

City Parcel Map

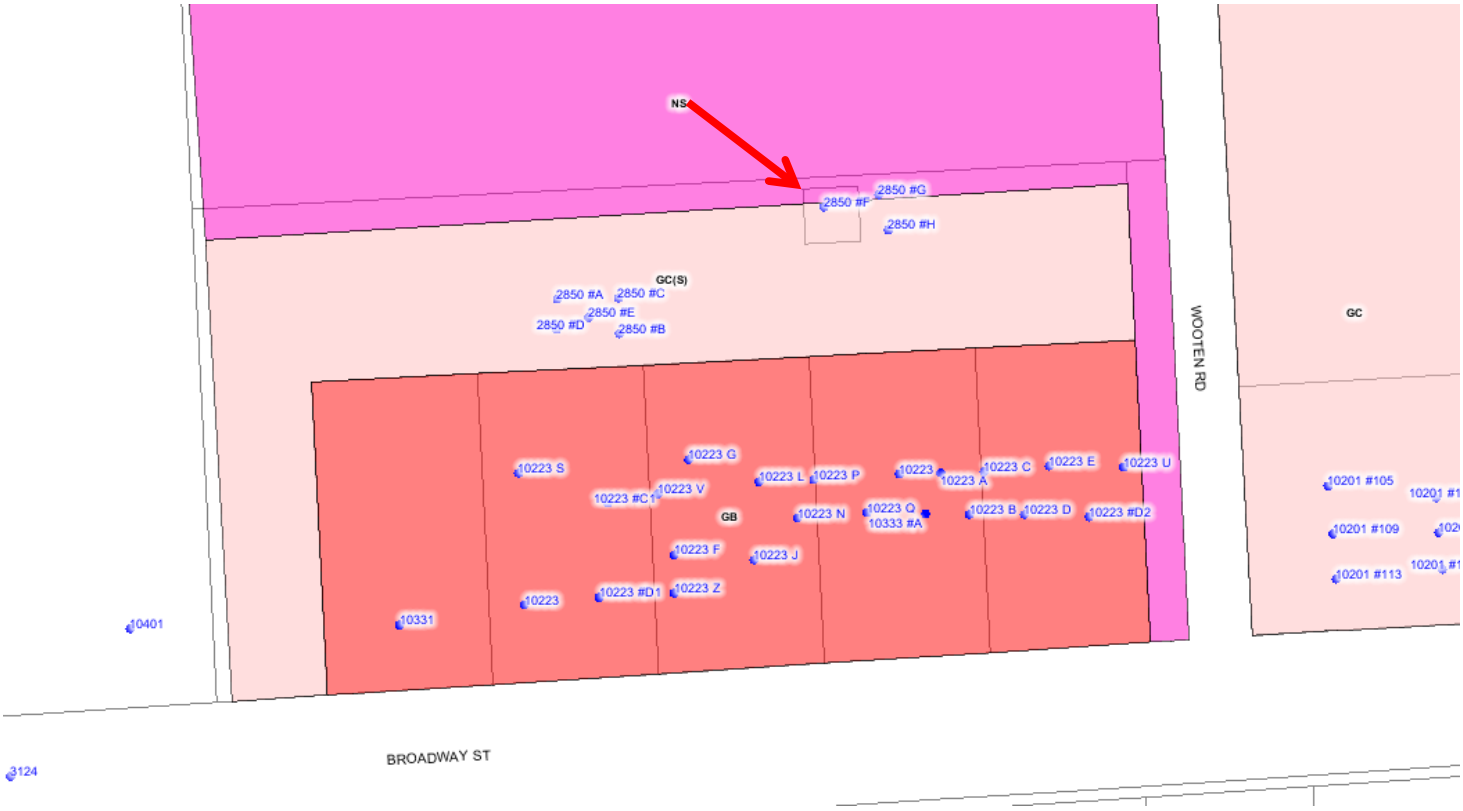

Exhibit C

Letter of Intent

CLEAR

4400 Carillon Point
Kirkland, WA 98033

p: 425-216-7600
f: 425-216-7900
www.clear.com

Monday, December 21, 2009

City of Pearland Community Development
3523 Liberty Dr
Pearland, TX 77581
Attn: Angela Gantuah

RE: Letter of Intent for CUP Application

Ms. Gantuah:

Powder River Development has been contracted by Clear Wireless, LLC to manage the development of its network in the Houston area. Based on the PreDevelopment Meeting we had on 12-16-2009, I am filing for a Conditional Use Permit (CUP) for co-locating antennas and related ground equipment on an existing tower located at 2850 Wooten Rd., Pearland, TX 77584.

Our ground space is limited to a 7'x7' area with several small equipment cabinets, mounted on an elevated platform instead of a concrete slab. We will be adding one additional array of antennas to the tower. The only utilities involved in this proposal are telephone and electricity.

Our current proposal does not include:

- Increased tower height
- Additional ground space to the compound
- Impervious ground cover
- Removal of any trees

If you have any questions, I can be reached at 713-261-5357.

Sincerely,

Blake Griggs
Real Estate Manager - ClearWire Houston
Blake.Griggs@PowderRiverDev.com
281-580-4100 (office)
281-580-4108 (fax)
713-261-5357 (cell)

Exhibit D

Check for Application Fee

Exhibit E

Site Plan

Full set of Construction Drawings to be submitted for Building Permit

clear wireless, llc

Clear Wireless Site Name: GTP TX-5021

Clear Wireless Site #: TX-HOU0290-A GTP Site #: TX-5021

DRAWING INDEX

SHEET	CONTENTS	REV
TX-HOU0290-A-T1	TITLE SHEET	0
TX-HOU0290-A-C1	SITE PLAN & ELEVATION	0
TX-HOU0290-A-C2	GENERAL NOTES & ANTENNA CONFIGURATION	0
TX-HOU0290-A-C3	ANTENNA DETAILS	0
TX-HOU0290-A-C4	EQUIPMENT DETAILS	0
TX-HOU0290-A-C5	PLUMBING DIAGRAM & EQUIPMENT ELEVATION	0
TX-HOU0290-A-E1	ELECTRICAL / GROUNDING PLAN & DETAILS	0
TX-HOU0290-A-E2	ELECTRICAL / GROUNDING DETAILS	0
TX-HOU0290-A-E3	SINGLE LINE DIAGRAM & LOAD SCHEDULE	0
TX-HOU0290-A-E4	ELECTRICAL / GROUNDING SPECIFICATIONS	0

VICINITY MAP

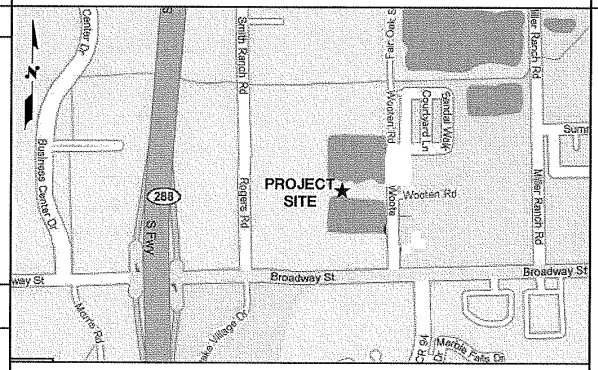

PROJECT INFORMATION

SITE NAME:	GTP TX-5021
SITE NUMBER:	TX-HOU0290-A
GPT SITE #:	TX-5021
SITE ADDRESS:	2850 WOOTEN RD. PEARLAND, TX 77581
LATITUDE:	29.55725° N
LONGITUDE:	-95.37972° W
TOWER OWNER ADDRESS:	GTP
CONTACT:	
APPLICANT:	CLEAR WIRELESS, LLC 4400 CARILLION POINT KIRKLAND, WA 98033
LOCAL OFFICE:	
CONTACT:	DOMINIQUE LAAN (504) 733-0899

STATE OF TEXAS
AHMAD S. ALAYYUBI
85368
LICENSED PROFESSIONAL ENGINEER
10/22/09

PROJECT PARTICIPANTS

ENGINEERING:

NEW TOWER, LLC
N3054 FUMEE LAKE DRIVE
IRON MOUNTAIN, MI 49801
PHONE: (239) 389-0825

PLANNING:

POWDER RIVER, DEVELOPMENT SERVICES, LLC
13131 CHAMPIONS DR, STE # 208
HOUSTON, TEXAS 77069
PHONE: (281) 580-4100
CONTACT: GARY OLIPHANT

ELECTRIC:

CENTERPOINT ENERGY
PHONE: (800) 332-4100

TELCO

A T & T
PHONE: (800) 499-7928

APPLICABLE CODES

ALL CONSTRUCTION WORKS AND MATERIALS SHALL COMPLY WITH THE LATEST ADOPTED EDITION OF THE:

1.1 INTERNATIONAL BUILDING CODE (IBC) 2003 AND ALL LOCAL CODES FOR THE JURISDICTION IN WHICH THE PROJECT IS BEING CONSTRUCTED.

1.2 INDUSTRIAL CODE EIA/TIA-222 F

1.3 OCCUPATIONAL SAFETY AND HEALTH STANDARDS

1.4 NATIONAL ELECTRICAL CODE

1.5 UNIFORM MECHANICAL CODE

At all new services & grounding trenches, provide "WARNING" tape at 12" below grade.

STOP
"CALL BEFORE YOU DIG"
1-800-245-4545
TEXAS ONE CALL UTILITY SYSTEM

DRIVING DIRECTIONS:

FROM CLEAR WIRELESS, LLC OFFICE IN PRUITT RD., THE WOODLANDS, TX 77380

TAKE I-45 (NORTH FREEWAY) SOUTH AND DRIVE APPROX 30 MILES. EXIT TO 59 SOUTH (SOUTHWEST FREEWAY) AND DRIVE APPROX. 0.75 MILE, EXIT INTO SOUTH FREEWAY (HWY 288). GO ON HWY 288 SOUTH. TURN LEFT (EAST) INTO BROADWAY STREET. DRIVE ON BROADWAY AND TURN LEFT TONTO WOODTEN ROAD. SITE IS A SELF-SUPPORTING TOWER ON THE LEFT SIDE OF THE ROAD.

A.D.A. COMPLIANCE

FACILITY IS UNMANNED AND NOT FOR HUMAN HABITATION

THIS FACILITY SHALL MEET OR EXCEED ALL FAA AND FCC REGULATORY REQUIREMENT

SITE QUALIFICATION PARTICIPANTS

	NAME	SIGNATURE	DATE
RF			
CONSTRUCTION			
INTERCONNECT			
SITE DEV. MANAGER			
PROPERTY OWNER			
PLANNING			

NEW TOWER, LLC
(TxBPE Registration # 85368)
N3054 Fumee Lake Drive
Iron Mountain, MI 49801
Phone: (239) 389-0825
Fax: (906) 774-5839

clear wireless, llc
4400 CARILLION POINT
KIRKLAND, WA 98033

POWDER RIVER
Development Services, LLC
13131 Champions Dr., Ste # 208
Houston, TX 77069
Phone: (281) 580-4100
Fax: (281) 580-4108

Clear Wireless Site Name:
GTP TX-5021
Clear Wireless Site # TX-HOU0290-A
2850 WOOTEN RD.
PEARLAND, TX 77581

NO.	DATE	REVISIONS	BY	CHK	APP'D
0	10/21/09	CONSTRUCTION REVIEW	HD	VD	AA
B	10/19/09	CONSTRUCTION REVIEW	HD	VD	AA
A	09/03/09	CONSTRUCTION REVIEW	HD	VD	AA

SCALE: AS SHOWN DESIGNED BY: OTHERS DRAWN BY: HD

NEW TOWER, LLC
IRON MOUNTAIN, MI

TITLE SHEET

DRAWING NUMBER: TX-HOU0290-A-T1 REV: 0

11 x 17 "D" SIZE

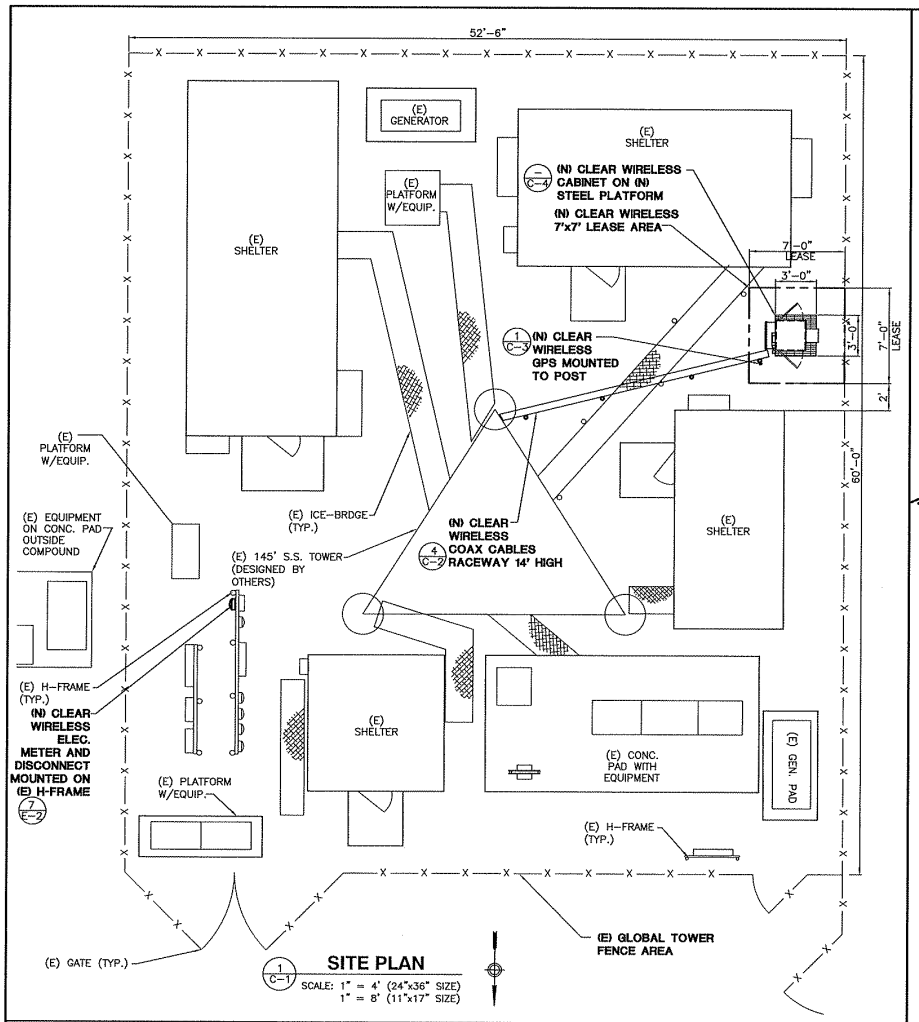

SITE PLAN
SCALE: 1" = 4' (24"x36" SIZE)
1" = 8' (11"x17" SIZE)

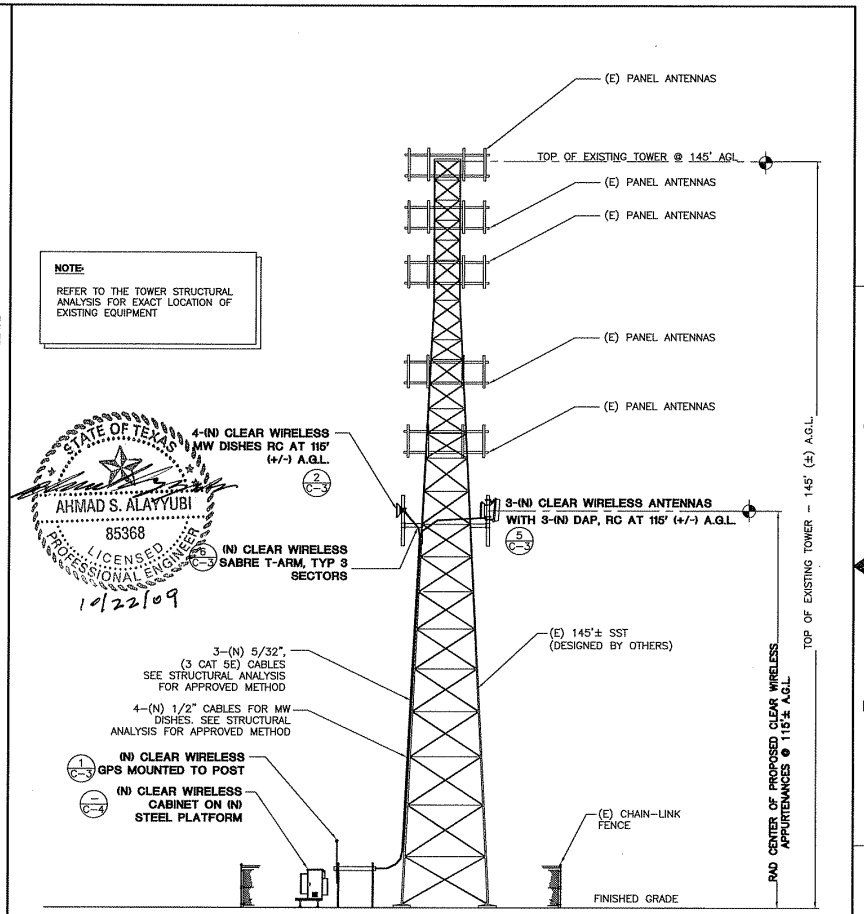

NOTE:
REFER TO THE TOWER STRUCTURAL ANALYSIS FOR EXACT LOCATION OF EXISTING EQUIPMENT

STATE OF TEXAS
AHMAD S. ALAYYUBI
85368
LICENSED PROFESSIONAL ENGINEER
10/22/09

ELEVATION VIEW
SCALE: NOT TO SCALE

NEW TOWER, LLC
(TxBPE Registration # 85368)
N3054 Fumee Lake Drive
Iron Mountain, MI 49801
Phone: (239) 389-0825
Fax: (906) 774-5839

clear wireless, llc
4400 CARILLION POINT
KIRKLAND, WA 98033

POWDER RIVER
Development Services, LLC
13131 Champions Dr., Ste # 208
Houston, TX 77069
Phone: (281) 580-4100
Fax: (281) 580-4108

Clear Wireless Site Name:
GTP TX-5021
Clear Wireless Site # TX-HOU0290-A
2650 WOOTEN RD.
PEARLAND, TX 77581

NO.	DATE	REVISIONS	BY	CHK	APP'D
0	10/21/09	CONSTRUCTION REVIEW	HD	VD	AA
B	10/19/09	CONSTRUCTION REVIEW	HD	VD	AA
A	09/03/09	CONSTRUCTION REVIEW	HD	VD	AA

SCALE: AS SHOWN | DESIGNED BY: OTHERS | DRAWN BY: HD

NEW TOWER, LLC
IRON MOUNTAIN, MI

SITE PLAN AND ELEVATION

DRAWING NUMBER: TX-HOU0290-A-C1
REV: 0

11 x 17 "B" SIZE

GENERAL NOTES:

1. INFORMATION SHOWN ON THESE DRAWINGS WAS OBTAINED BY FIELD MEASUREMENTS. THE GENERAL CONTRACTOR SHALL VERIFY ALL EXISTING CONDITIONS AND NOTIFY THE ENGINEER OF ANY DISCREPANCIES PRIOR TO CONSTRUCTION.

2. THE GENERAL CONTRACTOR AND HIS SUB CONSULTANTS SHALL BE RESPONSIBLE FOR OBTAINING ALL PERMITS AND INSPECTIONS WHICH MAY BE REQUIRED FOR THE WORK.

3. STRUCTURAL STEEL SHALL CONFORM TO THE LATEST EDITION OF THE AISC SPECIFICATIONS FOR STRUCTURAL STEEL BUILDINGS – ALLOWABLE STRESS DESIGN AND PLASTIC DESIGN INCLUDING THE COMMENTARY AND THE AISC CODE OF STANDARD PRACTICE.

4, STRUCTURAL STEEL PLATES AND SHAPES SHALL CONFORM TO ASTM A–36. ALL STRUCTURAL STEEL PIPES SHALL CONFORM TO ASTM A53 GRADE B. ALL STRUCTURAL STEEL TUBING SHALL CONFORM TO ASTM A500 GRADE B. ALL STRUCTURAL STEEL COMPONENTS AND FABRICATED ASSEMBLIES SHALL BE HOT DIPPED GALVANIZED AFTER FABRICATION.

5. WELDING SHALL BE IN ACCORDANCE WITH THE AMERICAN WELDING SOCIETY (AWS) D. 1. 1–98, STRUCTURAL WELDING CODE. STEEL WELD ELECTRODES SHALL BE E70XX. FIELD TOUCH–UP WITH ZINC RICH POINT (ALL EXISTING AND NEW AREAS) AFTER WELDING IS COMPLETE.

6. ALL THREADED STRUCTURAL FASTENERS FOR ANTENNA SUPPORT ASSEMBLIES SHALL CONFORM TO ASTM A307 OR ASTM A36. ALL STRUCTURAL FASTENERS FOR STRUCTURAL STEEL FRAMING SHALL CONFORM TO ASTM A325. FASTENERS SHALL BE 5/8" MIN. DIA, BEARING TYPE CONNECTIONS WITH THREADS EXCLUDED IN THE SHEAR PLANE. ALL EXPOSED FASTENERS, NUTS AND WASHERS SHALL BE GALVANIZED UNLESS NOTED OTHERWISE. CONCRETE EXPANSION ANCHORS SHALL BE HILTI KWIK–BOLTS UNLESS NOTED OTHERWISE. ALL ANCHORS INTO CONCRETE SHALL BE STAINLESS STEEL.

7, ALL COAXIAL CABLE CONNECTORS AND TRANSMITTER EQUIPMENT SHALL BE AS SPECIFIED BY THE OWNER AND IS NOT INCLUDED IN THESE CONSTRUCTION DOCUMENTS. THE CONTRACTOR SHALL FURNISH ALL CONNECTION HARDWARE REQUIRED TO SECURE THE CABLES. ETHERNET CABLES SHALL BE ATTACHED TO THE TOWER WAVEGUIDE LADDER USING UV–RESISTANT TIE WRAPS OR STAINLESS STEEL HARDWARE,

8. NORTH ARROW SHOWN ON PLANS REFERS TO TRUE NORTH. CONTRACTOR SHALL VERIFY NORTH AND INFORM ENGINEER OF ANY DISCREPANCY BEFORE STARTING CONSTRUCTION,

9. ALL REINFORCING STEEL SHALL CONFORM TO ASTM 615 GRADE 60, DEFORMED BILLET STEEL BARS.

10. CHAIN LINK FENCE SYSTEM SHALL INCLUDE THE FENCE POSTS, GATES AND ALL NECESSARY ERECTION ACCESSORIES, FITTINGS AND FASTENINGS. ALL FENCE SYSTEM COMPONENTS SHALL BE GALVANIZED IN ACCORDANCE WITH ASTM A153. GATES SHALL BE SWING GATES WITH 6'–0" LEAVES. REFER TO TYPICAL FENCE DETAILS FOR ADDITIONAL INFORMATION. INSTALL FENCE AFTER CONCRETE HAS ATTAINED 75% OF 28 DAY DESIGN STRENGTH.

11. FENCED SITE AREA SHALL BE CLEARED AND GRUBBED, REMOVE UNSUITABLE SOFT OR LOOSE SOILS, ORGANIC MATERIAL AND/OR RUBBLE TO FIRM SUBGRADE. FILL UNDERCUT UP TO 4 INCHES BELOW FINISHED GRADE. PLACE A 150 MIL WOVEN GEOTEXTILE FILTER FABRIC ON SUBGRADE AND FILL WITH 4 INCHES OF AASHTO 57 STONE TO FINISHED GRADE.

12. IT IS CLEARWIRE'S RESPONSIBILITY TO VERIFY THE STRUCTURAL CAPACITY OF THE EXISTING TOWER AND ITS FOUNDATION TO RESIST THE WIND/GRAVITY LOADS FROM THE PROPOSED ANTENNAS.

13, ALL FIELD CUT METAL WILL BE SCRAPED OF ANY RUST AND COLD GALVANIZING,

14. RUBBER CAPS WILL BE PLACED ON ALL EXPOSED UNISTRUT ENDS.

15. FACILITY IS UNMANNED AND NOT FOR HUMAN HABITATION (HANDICAPPED ACCESS NOT REQUIRED).

16, FACILITY HAS NO PLUMBING.

17. FACILITY WILL BE INDEPENDENTLY POWERED WITH SEPARATE METER.

18. ANTENNA INSTALLATION SHALL BE CONDUCTED BY FIELD CREWS EXPERIENCED IN THE ASSEMBLY AND ERECTION OF RADIO ANTENNAS, TRANSMISSION LINES AND SUPPORT STRUCTURES,

19. CONTRACT COMPANIES AND THEIR EMPLOYEES SHALL OBSERVE AND PRACTICE ALL O.S.H.A. SAFETY GUIDELINES WHILE PERFORMING SERVICE FOR CLEARWIRE TECHNOLOGIES, INC.

20. CONTRACTORS SHALL PERFORM A SAFETY INSPECTION PRIOR TO COMMENCING ALL WORK ACTIVITIES AT A CLEARWIRE TECHNOLOGIES, INC. LEASED OR OWNED SITE. CLEARWIRE TECHNOLOGIES, INC. SHALL BE IMMEDIATELY NOTIFIED OF SAFETY HAZARDS FOUND DURING THE INSPECTION THAT COULD CAUSE DAMAGE TO PROPERTY. ALL WORK SHALL BE HALTED UNTIL SUCH TIME THE REPORTED SAFETY IS CORRECTED. THE SAFETY HAZARD, IF POSSIBLE, SHOULD BE CORRECTED BY THE CONTRACTOR WHILE ON THE SITE. AFTER THE CONTRACTOR HAS NOTIFIED CLEARWIRE TECHNOLOGIES, INC. OF THE HAZARD AND HAS RECEIVED APPROVAL FROM CLEARWIRE TECHNOLOGIES, INC. TO PERFORM THE CORRECTION.

21. TOWER MODIFICATIONS. IF REQUIRED, ARE TO BE COMPLETED BEFORE INSTALLATION OF ANY EQUIPMENT.

MICROWAVE / RF DATA SHEET
SITE NUMBER: TX-HOU0203

SECTOR	ANTENNA MODEL	QTY	AZIMUTH (°)	AGL (FT)	ELECT TILT	MECH TILT
A	ARGUS LLPX310R	1	0	115		
B	ARGUS LLPX310R	1	120	115		
C	ARGUS LLPX310R	1	240	115		
ANDREW VHLP2.5–18 24" DIA. MW DISH		1	4.8507	115		
ANDREW VHLP2–23 24" DIA. MW DISH		1	97.8325	115		
ANDREW VHLP2.5–11 12" DIA. MW DISH		1	126.745	115		
ANDREW VHLP2–23 12" DIA. MW DISH		1	169.1453	115		
(1) DRAGONWAVE BTS UNITS, MODEL HORIZON COMPACT			ONE PER MW DISH **			
(3) CLEARWIRE BTS UNITS, MODEL TYPE IV BTS DAP			ONE PER ANTENNA, MOUNTED BEHIND PANEL ANTENNA **			

* CHECK FINAL RF DATA SHEET BEFORE INSTALLATION.
** SEE TOWER STRUCTURAL ANALYSIS REPORT FOR EXACT LOCATION OF THE BTS MOUNTS

1 C–2 ANTENNA INFORMATION
N.T.S.

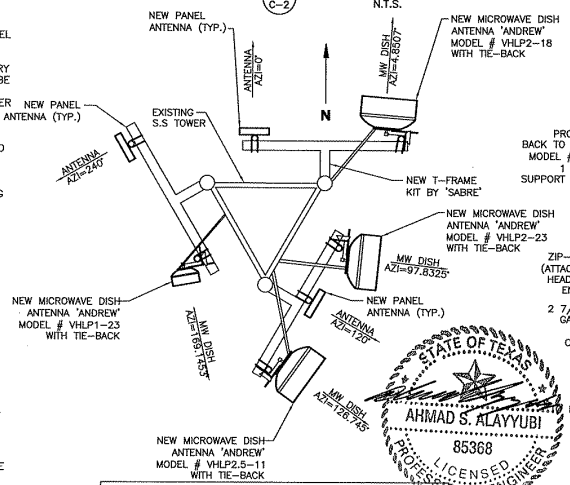

FOR FINAL CONFIRMATION OF ANTENNA ORIENTATION THE RF CONFIGURATION ALWAYS HAS PRECEDENCE

3 C–2 ANTENNA CONFIGURATION
N.T.S.

STATE OF TEXAS
AHMAD S. ALAYYUBI
85368
LICENSED PROFESSIONAL ENGINEER
10/22/09

SECTOR DEGREE RANGE	MARKING METHOD COLOR BANDS	BAND NUMBER
301° TO 60°	RED	SMALLEST NUMBER IN THIS SECTOR DEGREE RANGE WILL BE LABELED "R1". THE NEXT LARGER NUMBER WILL BE LABELED "R2".
61° TO 180°	BLUE	SMALLEST NUMBER IN THIS SECTOR DEGREE RANGE WILL BE LABELED "B1". THE NEXT LARGER NUMBER WILL BE LABELED "B2".
181° TO 300°	YELLOW	SMALLEST NUMBER IN THIS SECTOR DEGREE RANGE WILL BE LABELED "Y1". THE NEXT LARGER NUMBER WILL BE LABELED "Y2".

NOTES:

1. LABEL MARKINGS SHALL BE REPLACED WITHIN 12" OF THE CABLE AT BOTH ENDS, AT OR NEAR TOWER MGB AND EITHER PRIOR TO THE ENTRY INTO THE CONDUIT OR PRIOR TO ENTRY INTO THE CABINET. LABEL MARKING SHALL BE AT LEAST 1" WIDE BUT NOT MORE THAN 2" WIDE. FOR MULTIPLE BAND MARKINGS, BANDS SHALL BE SEPARATED BY AT LEAST 1" BUT NOT MORE THAN 2".

2. ETHERNET CABLES SHALL BE ATTACHED TO THE TOWER WAVEGUIDE LADDER USING UV–RESISTANT BLACK CABLE TIES WITH MINIMUM 40 LBS. BREAKING STRENGTH.

3. MW CABLE MARKING – GOING CLOCKWISE THE FIRST MW ANTENNA IN EACH SECTOR RANGE WILL HAVE ONE (1) WRAP OF THE SECTOR COLOR, THE SECOND MW ANTENNA IN THE SAME SECTOR WILL HAVE TWO (2) WRAPS OF THE PARTICULAR SECTOR COLOR TAPE.

2 C–2 COAX CABLE COLOR CODING
N.T.S.

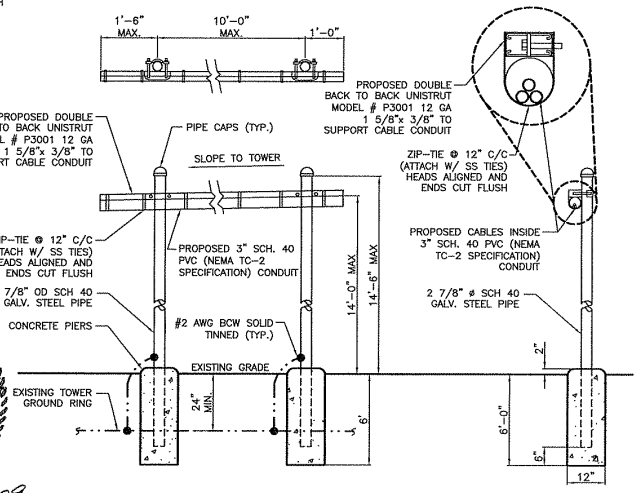

4 C–2 COAX CABLE RACEWAY DETAILS
N.T.S.

NEW TOWER, LLC
(TxBPE Registration # 85368)
N3054 Fumee Lake Drive
Iron Mountain, MI 49801
Phone: (239) 389–0825
Fax: (906) 774–5839

clear wireless, llc
4400 CARILLION POINT
KIRKLAND, WA 98033

POWDER RIVER
Development Services, LLC
13131 Champions Dr., Ste # 208
Houston, TX 77069
Phone: (281) 580-4100
Fax: (281) 580-4108

Clear Wireless Site Name:
GTP TX-5021
Clear Wireless Site # TX-HOU0290-A
2850 WOOTEN RD.
PEARLAND, TX 77581

NO.	DATE	REVISIONS	BY	CHK	APP'D
0	10/21/09	CONSTRUCTION REVIEW	HD	VD	AA
B	10/19/09	CONSTRUCTION REVIEW	HD	VD	AA
A	09/03/09	CONSTRUCTION REVIEW	HD	VD	AA

SCALE: AS SHOWN | DESIGNED BY: OTHERS | DRAWN BY: HD

NEW TOWER, LLC
IRON MOUNTAIN, MI

GENERAL NOTES & ANTENNA CONFIGURATION

DRAWING NUMBER: TX-HOU0290-A- C2 | REV: 0

11 x 17 "B" SIZE

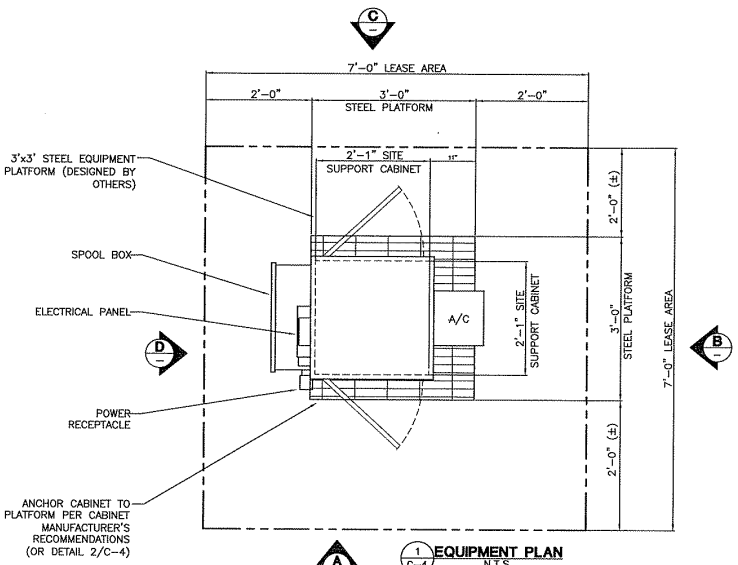

1 C-4 EQUIPMENT PLAN
N.T.S.

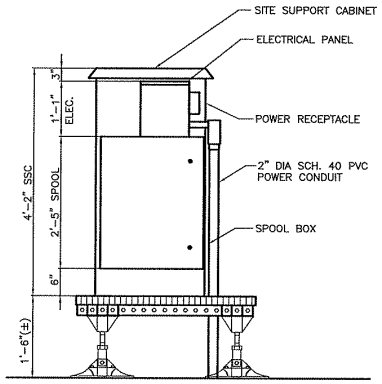

D SITE SUPPORT CABINET ELEVATION
N.T.S.

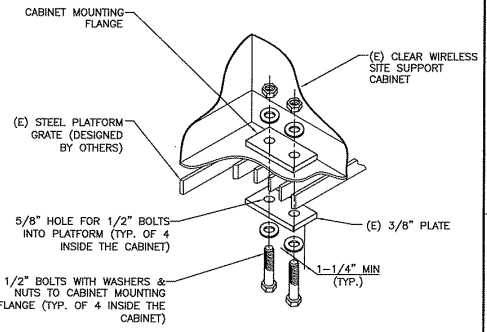

2 C-4 CABINET MOUNTING DETAILS
N.T.S.

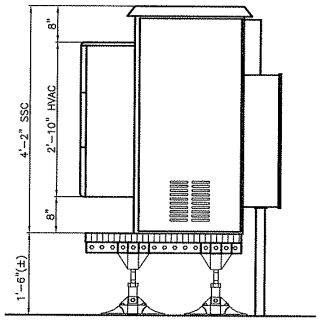

C SITE SUPPORT CABINET ELEVATION
N.T.S.

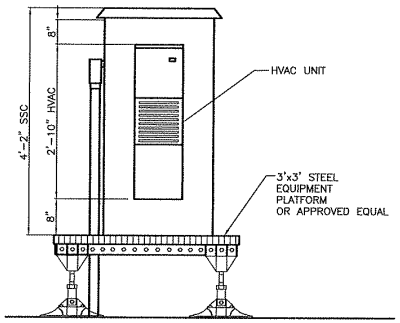

B SITE SUPPORT CABINET ELEVATION
N.T.S.

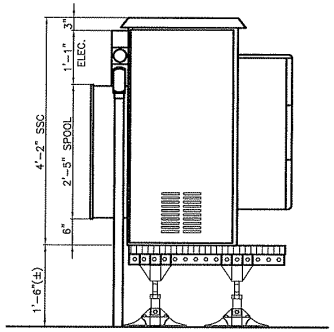

A SITE SUPPORT CABINET ELEVATION
N.T.S.

STATE OF TEXAS
AHMAD S. ALAYYUBI
85368
LICENSED PROFESSIONAL ENGINEER
10/22/09

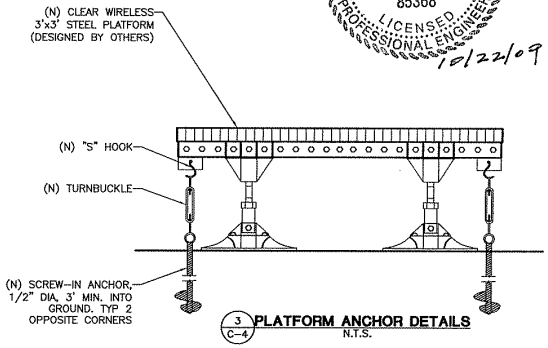

3 C-4 PLATFORM ANCHOR DETAILS
N.T.S.

NEW TOWER, LLC
(TxBPE Registration # 85368)
N3054 Fumee Lake Drive
Iron Mountain, MI 49801
Phone: (239) 389-0825
Fax: (906) 774-5839

clear wireless, llc
4400 CARILLION POINT
KIRKLAND, WA 98033

POWDER RIVER
Development Services, LLC
13131 Champions Dr., Ste # 208
Houston, TX 77069
Phone: (281) 580-4100
Fax: (281) 580-4108

Clear Wireless Site Name:
GTP TX-5021
Clear Wireless Site # TX-HOU0290-A
2850 WOOTEN RD.
PEARLAND, TX 77581

NO.	DATE	REVISIONS	BY	CHK	APP'D
0	10/21/09	CONSTRUCTION REVIEW	HD	VD	AA
B	10/19/09	CONSTRUCTION REVIEW	HD	VD	AA
A	09/03/09	CONSTRUCTION REVIEW	HD	VD	AA

SCALE: AS SHOWN | DESIGNED BY: OTHERS | DRAWN BY: HD

NEW TOWER, LLC
IRON MOUNTAIN, MI

EQUIPMENT DETAILS

DRAWING NUMBER: TX-HOU0290-A- C4
REV: 0

11 x 17 "B" SIZE

Exhibit F

Acknowledgement of Posting

To be submitted upon actual posting

Supplemental A

Maps

Zoning Map

Zoning Map with Satellite

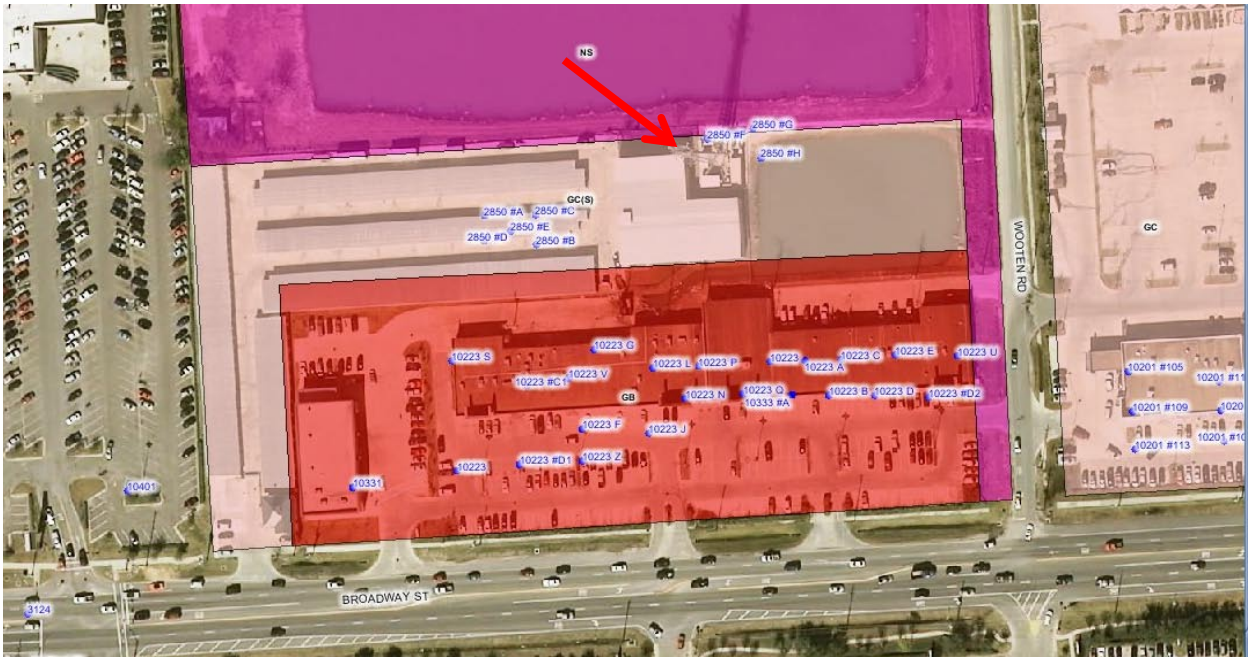

Land Use Map

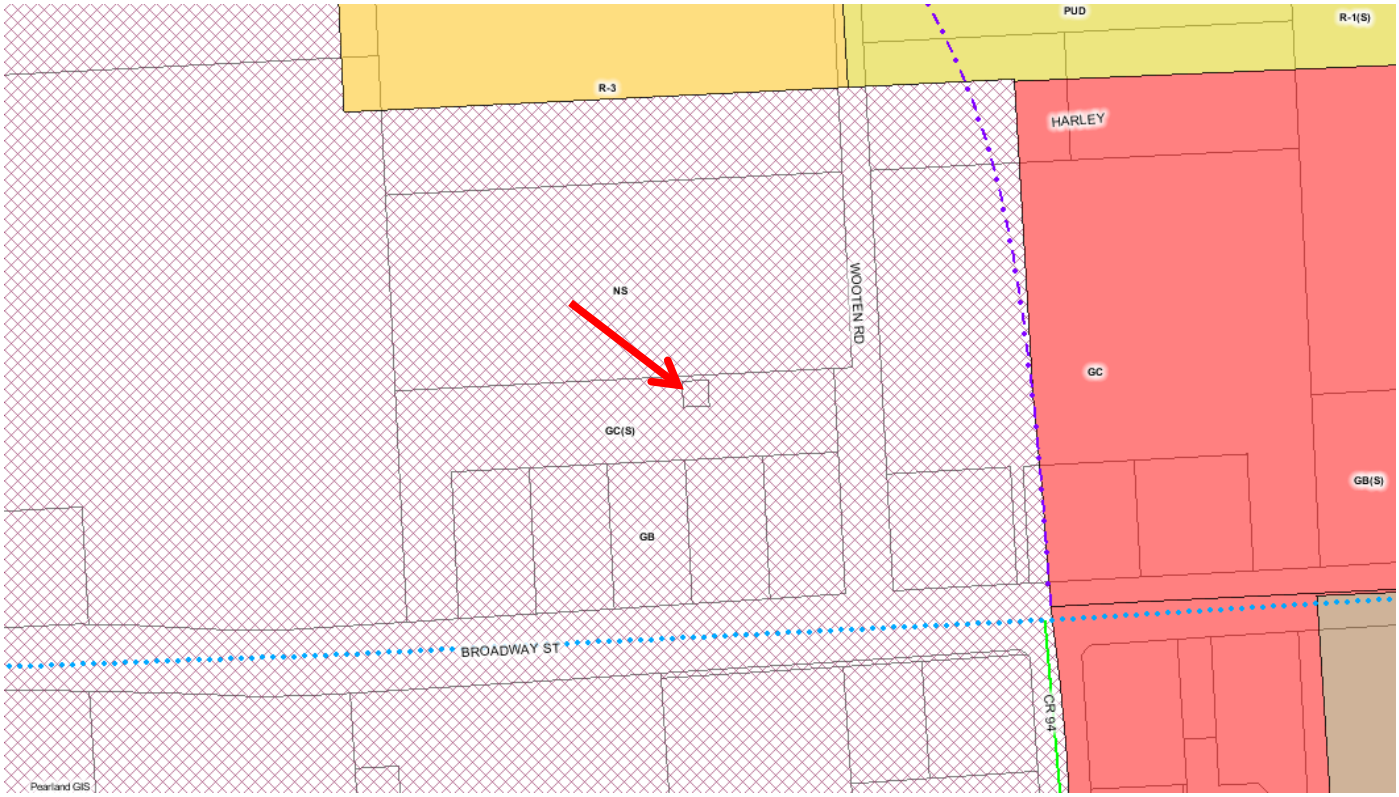
PUD
R-1(S)
R-3
HARLEY
NS
WOOTEN RD
GC
GC(S)
GB(S)
GB
BROADWAY ST
CR 94
Pearland GIS

Satellite Image

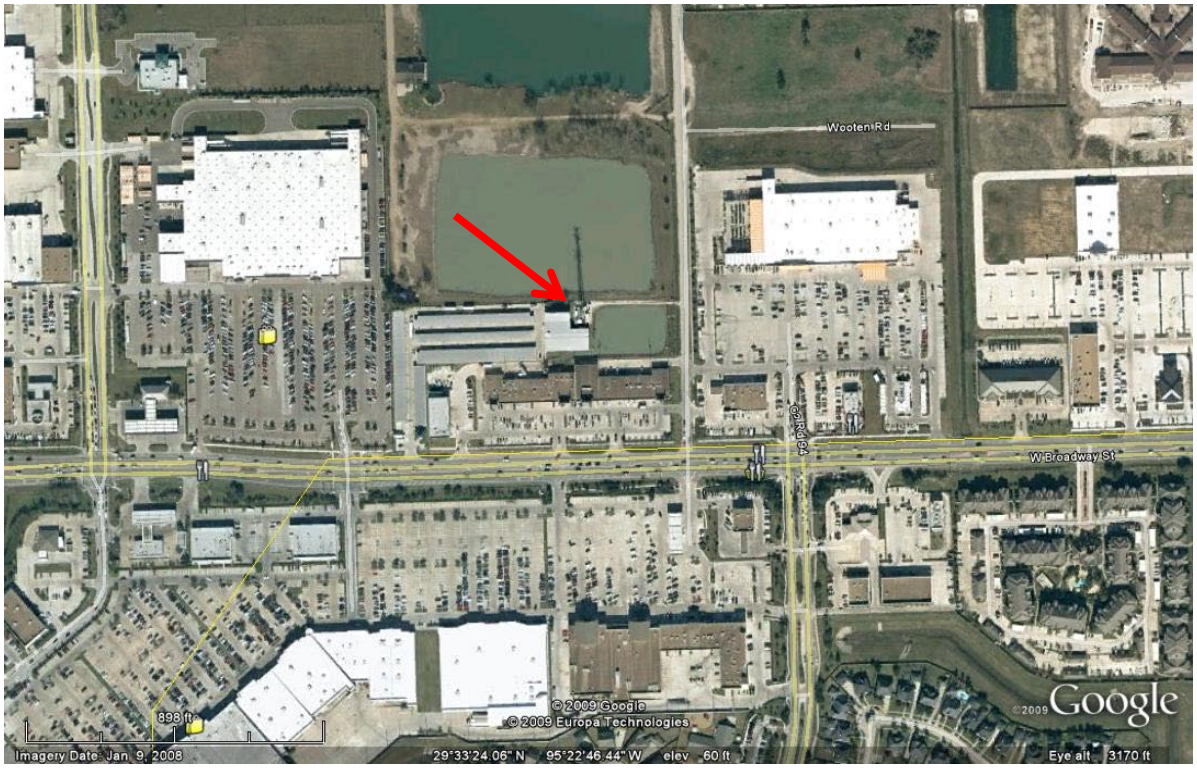

Enlarged Satellite Image

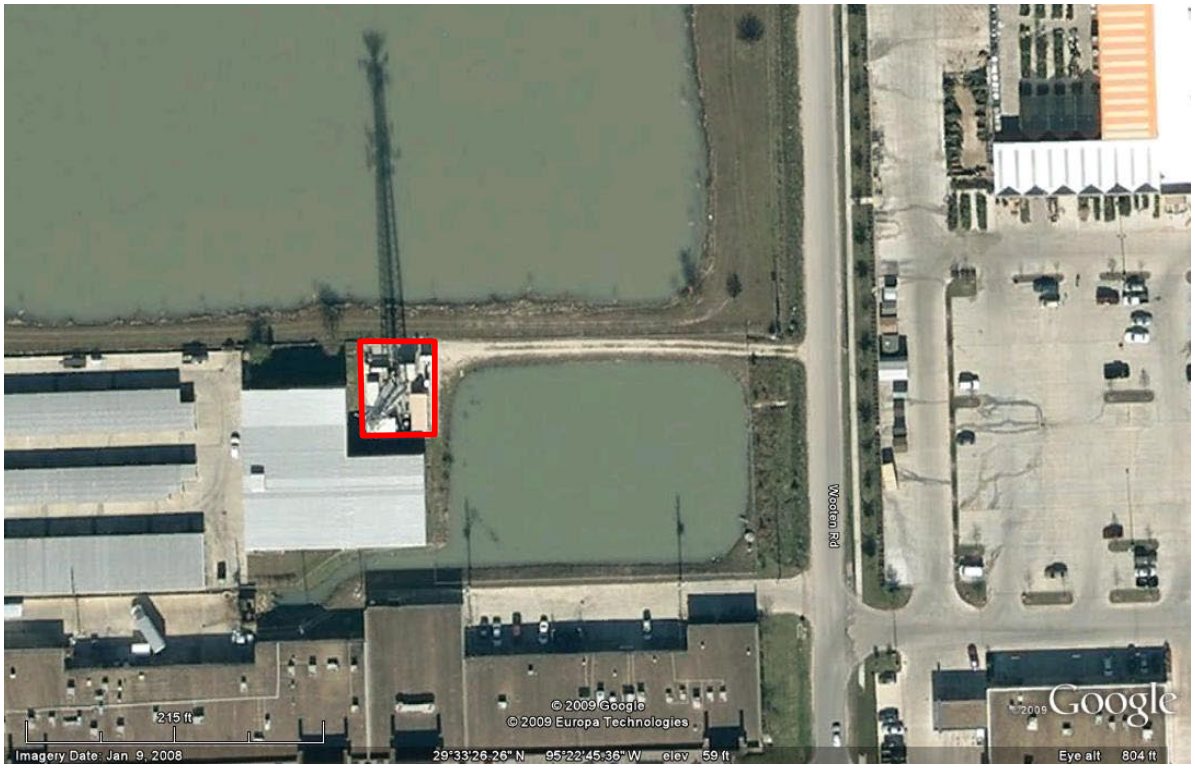

Supplement B

Photos

Overview of Site

Site Photos

Looking West towards the compound

Existing equipment cabinets

Supplement C

Property Records

Brazoria CAD

Property Search Results > 522376 GTP ACQUISITION PARTNERS II LLC for Year 2009

Property

Account

Property ID:	522376	Legal Description:	BROADWAY WEST (A0304 HT&BRR)(PEARLAND), LOT 1A, ACRES 0.0689
Geographic ID:	2198-0000-010	Agent Code:	
Type:	Real		

Location

Address:	BROADWAY FM 518 PEARLAND, TX 77581	Mapsco:	
Neighborhood:		Map ID:	
Neighborhood CD:			

Owner

Name:	GTP ACQUISITION PARTNERS II LLC	Owner ID:	362334
Mailing Address:	C/O GLOBAL TOWER PARTNERS - PROP TAX DEPT PO BOX 811510 BOCA RATON, FL 33481-1510	% Ownership:	100.0000000000%
		Exemptions:	

Values

(+) Improvement Homesite Value:	+	$0		
(+) Improvement Non-Homesite Value:	+	$0		
(+) Land Homesite Value:	+	$0		
(+) Land Non-Homesite Value:	+	$15,010	Ag / Timber Use Value	
(+) Agricultural Market Valuation:	+	$0		$0
(+) Timber Market Valuation:	+	$0		$0

(=) Market Value:	=	$15,010		
(–) Ag or Timber Use Value Reduction:	–	$0		

(=) Appraised Value:	=	$15,010		
(–) HS Cap:	–	$0		

(=) Assessed Value:	=	$15,010		

Taxing Jurisdiction

Owner: GTP ACQUISITION PARTNERS II LLC
% Ownership: 100.0000000000%
Total Value: $15,010

Entity	Description	Tax Rate	Appraised Value	Taxable Value	Estimated Tax
CAD	BRAZORIA COUNTY APPRAISAL DISTRICT	0.000000	$15,010	$15,010	$0.00
CPL	CITY OF PEARLAND	0.652600	$15,010	$15,010	$97.96
DR4	BRAZORIA COUNTY DRAINAGE DISTRICT #4 (PEARLAND)	0.143845	$15,010	$15,010	$21.59
GBC	BRAZORIA COUNTY	0.366286	$15,010	$15,010	$54.98
RDB	ROAD & BRIDGE FUND	0.060000	$15,010	$15,010	$9.01
SPL	PEARLAND INDEPENDENT SCHOOL DISTRICT	1.419400	$15,010	$15,010	$213.05
	Total Tax Rate:	2.642131			
				Taxes w/Current Exemptions:	$396.58
				Taxes w/o Exemptions:	$396.58

Improvement / Building

No improvements exist for this property.

Land

#	Type	Description	Acres	Sqft	Eff Front	Eff Depth	Market Value	Prod. Value
1	S1	PRIMARY SITE	0.0689	3001.00	0.00	0.00	$15,010	$0

Roll Value History

Year	Improvements	Land Market	Ag Valuation	Appraised	HS Cap	Assessed
2010	N/A	N/A	N/A	N/A	N/A	N/A
2009	$0	$15,010	0	15,010	$0	$15,010
2008	$0	$15,010	0	15,010	$0	$15,010
2007	$0	$15,010	0	15,010	$0	$15,010
2006	$0	$15,010	0	15,010	$0	$15,010
2005	$0	$15,010	0	15,010	$0	$15,010
2004	$0	$15,010	0	15,010	$0	$15,010

2003	$0	$9,000	0	9,000	$0	$9,000
2002	$0	$9,000	0	9,000	$0	$9,000
2001	$0	$4,500	0	4,500	$0	$4,500

Deed History - (Last 3 Deed Transactions)

#	Deed Date	Type	Description	Grantor	Grantee	Volume	Page
1	9/30/2005 12:00:00 AM	WD	WARRANTY DEED	GLOBAL TOWER LI	GTP ACQUISITION	06	002708
2	10/31/2003 12:00:00 AM	WD	WARRANTY DEED	AMERICAN TOWEF	GLOBAL TOWER LI	03	071572
3	8/4/2000 12:00:00 AM	WD	WARRANTY DEED	518 INVESTMENT J	AMERICAN TOWEF	00	033854

Questions Please Call (979) 849-7792

Website version: 1.2.2.2

Database last updated on: 12/6/2009 8:34 PM

© 2009 True Automation, Inc. All Rights Reserved.
Privacy Notice

This site only supports Internet Explorer 6+, Netscape 7+ and Firefox 1.5+.

Brazoria CAD

Property Search Results > Property ID 522376 GTP ACQUISITION PARTNERS II LLC for Year 2009

Map Image

Legend

- dynField5PROP_ID
- dynProperty
- PropHighlight
- County
- Abstracts
- City Limits
- Export
- Parcels
- Parcels Poly
- Roads

Property Details

Account

Property ID:	522376
Geo. ID:	2198-0000-010
Type:	Real
Legal Description:	BROADWAY WEST (A0304 HT&BRR)(PEARLAND), LOT 1A, ACRES 0.0689

Location

Address:	BROADWAY FM 518 PEARLAND, TX 77581
Neighborhood:	
Mapsco:	
Jurisdictions:	CAD, CPL, DR4, GBC, RDB, SPL

Owner

Name:	GTP ACQUISITION PARTNERS II LLC
Address:	C/O GLOBAL TOWER PARTNERS - PROP TAX DEPT PO BOX 811510 BOCA RATON, FL 33481-1510

Property

Appraised Value:	$15,010

Website version: 1.2.2.2

Database last updated on: 12/6/2009 8:34 PM

© 2009 True Automation, Inc. All Rights Reserved. Privacy Notice

This site only supports Internet Explorer 6+, Netscape 7+ and Firefox 1.5+.

Supplement D

Structural Analysis

Full structural analysis calculations will be provided upon request (23 pages)

GTP
GLOBAL TOWER Services

Structural Analysis Report

190 ft. Self Support Tower

2850 A Wooten Road, Pearland, TX 77584
Brazoria County
(TX-5021, Pearland #2)

Clearwire
Clearwire Site No. TX-HOU0290
Clearwire Site Name: GTP TX-5021

Prepared by:

Global Tower Services, LLC
Michael T. De Boer, P.E.
Director of Structural Engineering

April 6, 2009

1801 Clint Moore Road • Suite 110 • Boca Raton, FL 33487-2752
Phone 605.422.1548 • Fax 605.422.1550

Global Tower Services, LLC
April 6, 2009
Pearland #2
TX-5021

Table of Contents

Introduction.....3

Description of Structure.....3

Design Parameter.....3

Antenna Loading Information.....4

Analysis Results.....4 - 5

Analysis Summary and Conclusions.....5

Standard Conditions.....6

Disclaimer of Warranties.....7

Appendix A - Tower Profile.....Attached

Appendix B - Calculations.....Attached

Global Tower Services, LLC
April 6, 2009
Pearland #2
TX-5021

INTRODUCTION

We have completed the structural analysis for the existing 190 ft. self support tower located in Brazoria County (2850 A Wooten Road, Pearland), TX. The objective of the analysis is to determine if the existing self support tower design is in conformance / compliance with the current codes and standards for the proposed equipment installation.

TSTower written by TowerSoft was utilized in performing the analysis. This program is a commercially available software program which was used to create a non-linear three-dimensional beam model and calculate member stresses for various loading conditions.

DESCRIPTION OF STRUCTURE

The existing structure is a 190 ft. self support tower originally manufactured by Allied Tower, Vinita, OK. The existing structure consists of ten (10) tower sections with solid round legs and angle bracing.

Original tower drawings provided by Allied Tower were used to model the tower steel. (Allied Tower Job No. 11728, April 22, 1999) The tower legs are 50 ksi steel, the tower bracing is 36 ksi steel and the bolts are A325X.

The tower, for the purpose of analysis, is considered to be in good condition with no defects.

DESIGN PARAMETERS

- Standard:	ANSI/TIA-222-F-1996
- Basic Wind Speed:	100 mph (fastest mile) 120 mph (3-sec gust)
- Serviceability Wind Speed:	50 mph (fastest mile)
- Basic Wind Speed with Ice:	N/A
- Design Ice Thickness:	0.0 (inch)
- Allowable Stress Increase:	1/3 for wind loading conditions

Global Tower Services, LLC
April 6, 2009
Pearland #2
TX-5021

ANTENNA LOADING INFORMATION

Existing and Reserved Loading Information

Antenna Description/Mount	Qty	Elev. (ft.)	TX Lines	Qty	Customer
RFS APX17DWV-quad / Sector Frames	6	180	1 5/8"	12	T-Mobile
RFS APXV18-dual / Sector Frames	3	180	1 5/8"	10	T-Mobile
DUO1417-10570 / Sector Frames	12	168	1 ¼"	12	ATT
Wisp24013120 Panels / Flush Mounts	3	166	½"	3	Prosky
6' PCS/Cell Panels / T-Frames	3	162	7/8"	12	Verizon
HP2-102 Dish / Pipe Mount	1	150	½"	1	Prosky
CSA 75" x 8.5" Panels / Sector Frames	6	135	1 5/8"	6	Cricket
EMS FV90-12-05 / Sector Frames	3	120	7/8"	6	Nextel
EMS RV65-12-00DBL / Sector Frames	3	120	7/8"	3	Nextel

Proposed Loading Information

Antenna Description/Mount	Qty	Elev. (ft.)	TX Lines	Qty	Customer
42" X 13" Panels / T-Frames	3	115	5/16"	6	Clearwire
VHLP2-18-1WH / Pipe Mount	3	115	½"	3	Clearwire

ANALYSIS RESULTS

Structure

The existing 190 ft. self support **is structurally capable** of supporting the proposed equipment. **(See table below)**

Tower Member	% Capacity	Results
Tower Legs	105	Pass
Tower Diagonals	87	Pass
Tower Horizontals	8	Pass

(105 percent is considered acceptable.)

Global Tower Services, LLC
April 6, 2009
Pearland #2
TX-5021

ANALYSIS RESULTS continued

Foundation

The existing tower foundation has also been evaluated. The existing foundation was found to be **acceptable** with the proposed equipment installation.

Tower Rating: 105%

Summary and Conclusions

The existing 190 ft. self support tower located in Brazoria County (2850 A Wooten Road, Pearland), TX **is structurally acceptable** based upon the EIA-222-F 1996 Standard and the local building code with the proposed equipment installed.

If any other changes are proposed, another structural analysis should be performed to assure the tower is in compliance / conformance with the applicable codes and standards.

Should any further questions arise, please contact the Global Tower Services, LLC Engineering Department at 605-422-1548.

Global Tower Services, LLC

Michael T. De Boer, P.E.
Director of Structural Engineering

STATE OF TEXAS
MICHAEL T. DeBOER
82386
REGISTERED PROFESSIONAL ENGINEER
4/7/09

Supplement E

Lease Agreement

LESSOR Site Number & Name: TX-5021 Pearland #2
LESSEE Site Number & Name: TX-HOU0290 GTP TX-5021

SITE LICENSE AGREEMENT

This Site License Agreement ("SLA"), made this 3 day of April, 2009 ("Effective Date") between GTP ACQUISITION PARTNERS II, LLC, with its principal offices located at 1801 Clint Moore Road, Suite 110, Boca Raton, FL 33487, hereinafter designated LESSOR and CLEAR WIRELESS, LLC, with its principal offices at 4400 Carillion Point, Kirkland, WA 98033, hereinafter designated LESSEE.

1. This Site License Agreement is a SLA as referenced in that certain Master Lease Agreement between Global Tower, LLC and Clearwire US, LLC dated May 10, 2007 ("Agreement"). All of the terms and conditions of the Agreement are incorporated hereby by reference and made a part hereof without the necessity of repeating or attaching the Agreement. In the event of a contradiction, modification or inconsistency between the terms of the Agreement and this SLA, the terms of this SLA shall govern. Capitalized terms used in this SLA shall have the same meaning described for them in the Agreement unless otherwise indicated herein.

2. The Property owned by the LESSOR is located in Brazoria County at 2850 A Wooten Road, Pearland, TX 77584 and further described in Exhibit 1 attached hereto.

3. The Premises leased by the LESSOR to the LESSEE hereunder is a ten foot by eighteen foot area (10' x 18') further described in Exhibit 2 attached hereto.

4. In the event an Exhibit 2 is attached hereto describing the Premises, the LESSEE shall have the right to survey the Property and/or Premises and said survey shall then become Exhibit 2A which shall be attached hereto and made a part hereof and shall control in the event of any discrepancies between it and Exhibit 2. The cost for such work shall be borne by the LESSEE.

5. The initial term ("Initial Term") shall be for ten (10) years and shall be subject to extension as provided in Section 5 of the Agreement. The commencement date hereof is the first (1st) day of the month in which LESSEE commences the installation of its equipment or one hundred and fifty (150) days from the full execution date of this SLA, whichever occurs first, and shall be hereinafter referred to as the "Commencement Date".

6. The rental for the initial term pursuant to this SLA shall be due at an annual rental of [redacted] to be paid in equal monthly installments of [redacted] on the first day of the month, in advance, to **Global Tower, LLC (c/o: SunTrust Bank), P.O. Box 102534, Atlanta, GA 30368-2534 Attention: TX-5021 Pearland #2** or to such other person, firm or place as the LESSOR may, from time to time, designate in writing at least thirty (30) days in advance of any rental payment date. In accordance with section 6 of the Agreement, the Rent for each year shall be [redacted] of the annual Rent for the immediately preceding year commencing on the annual anniversary thereof

7. If the Property is subject to a prime lease, license or other such agreement affecting LESSOR's interest at the Property, a copy of such agreement is attached hereto as Exhibit 3.

8. LESSEE's Equipment Information (subject to modification in accordance with the Agreement): Please see the approved Collocation Application attached as Exhibit 4.

(SIGNATURES ON PAGE IMMEDIATELY FOLLOWING)

LESSOR Site Number & Name: TX-5021 Pearland #2
LESSEE Site Number & Name: TX-HOU0290 GTP TX-5021

IN WITNESS WHEREOF, the parties hereto have set their hands and affixed their respective seals the day and year first above written.

LESSOR: GTP ACQUISITION PARTNERS II, LLC
a Delaware limited liability company

WITNESS

WITNESS

BY:
NAME: Terry Armant
TITLE: Sr. VP Development
DATE: 3/18/09

LEGAL REVIEWED KJB

LESSEE: CLEAR WIRELESS, LLC
a Nevada limited liability company

WITNESS

WITNESS

BY:
NAME: Eric Law
TITLE: Director of Engineering & Operations
DATE: 4/3/09

LESSOR Site Number & Name: TX-5021 Pearland #2
LESSEE Site Number & Name: TX-HOU0290 GTP TX-5021

EXHIBIT 1

Description of Property

LESSOR Site Number & Name: TX-5021 Pearland #2
LESSEE Site Number & Name: TX-HOU0290 GTP TX-5021

EXHIBIT 2

Description of Premises

TX 5021

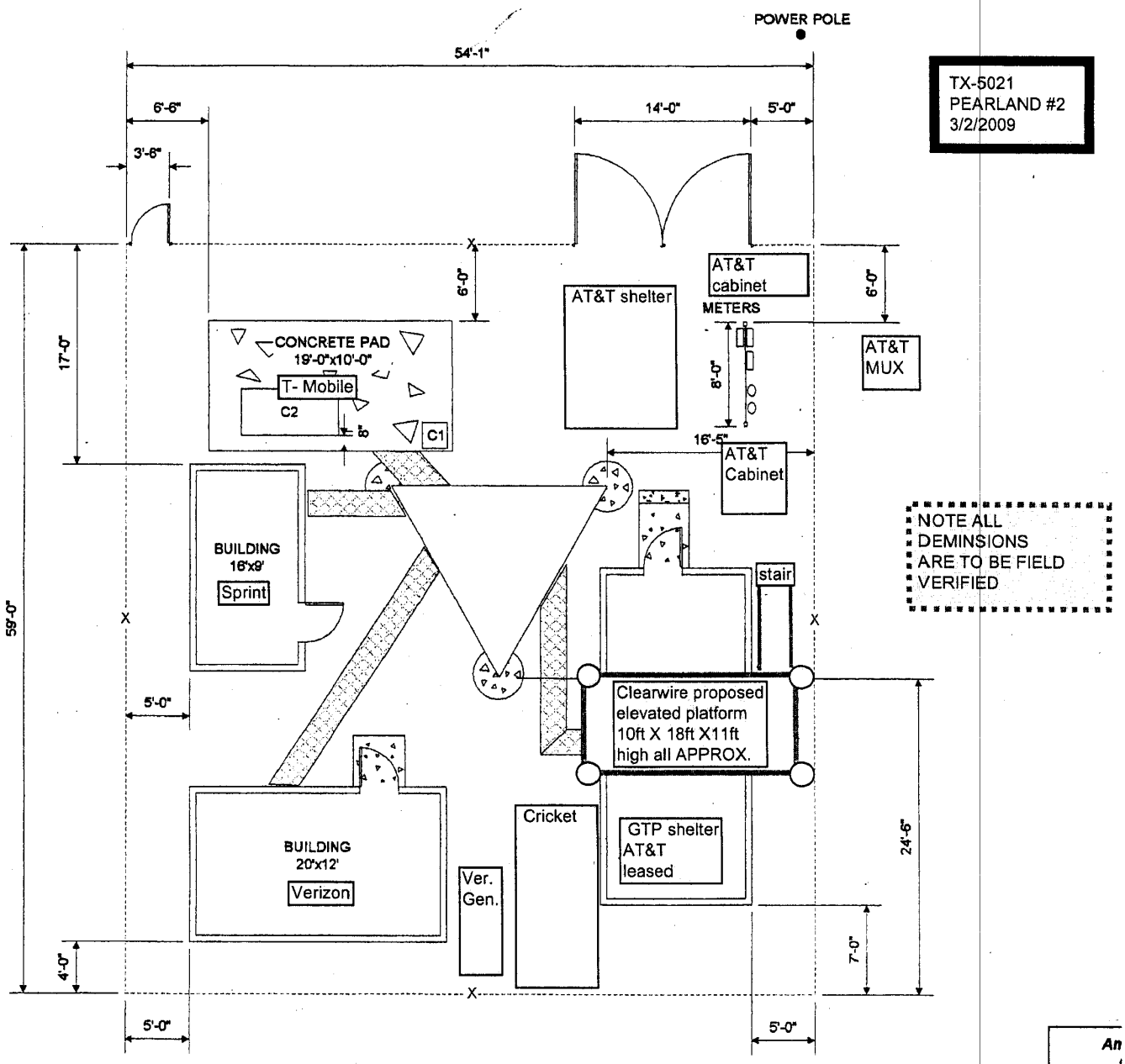

SITE PLAN

TX-5021
PEARLAND #2

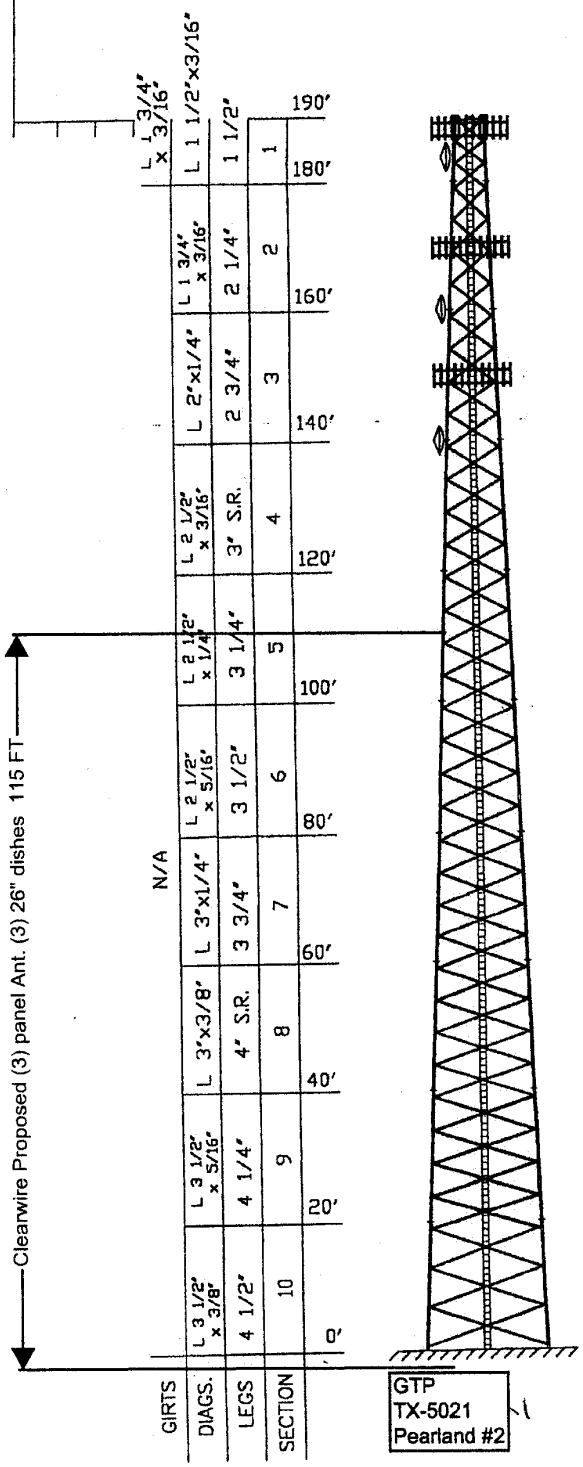

GENERAL NOTES:

1.) TOWER IS DESIGNED PER ANSI\TIA\EIA 222-F AND AISC REQUIREMENTS FOR 100 MPH BASIC WIND SPEED AT ELEV. 33 FT. WITH NO RADIAL ICE. A WIND REDUCTION HAS NOT BEEN TAKEN TO MPH WITH THE ICE LOAD. WIND IS APPLIED TO TOWER, ACCESSORIES, ANTENNAS AND LINES.

2.) TOWER STEEL(MIN STEEL YIELD) LEGS ARE 50 KSI. MIN. BRACING AND ALL OTHER STEEL IS 36 KSI. MIN.

3.) CONNECTION BOLTS ARE A-325 HIGH STRENGTH BOLTS (HOT DIP GALV.) COMPLETE WITH LOCKWASHER AND HEAVY HEX NUT. U-BOLTS, J-BOLTS, ETC. ARE A-36 BOLTS. (HOT DIP GALV.) COMPLETE WITH LOCKWASHER AND HEAVY HEX NUT. EXCEPT ANCHOR BOLTS COME COMPLETE WITH (3) HHN. (1 FOR LEVELING AND 2 FOR LOCKING).

4.) TOWER AND ACCESSORIES ARE (HOT DIP GALV.) IN ACCORDANCE WITH ASTM A-123 OR ASTM B-695 CLASS 65 FOR HARDWARE.

ANTENNAS

TYPE	ELEV.	LINE	AZ.	POL.
(12) COMSAT PCSA060-19	190'	2 1/4" HELIAX		
(1) ANDREW 6' SOLID WITH RADOME	187'	1 5/8" HELIAX		
(12) DAPA 58000	170'	1 5/8" HELIAX		
(1) ANDREW 6' SOLID WITH RADOME	160'	1 5/8" HELIAX		
(12) DAPA 58000	150'	1 5/8" HELIAX		
(1) ANDREW 6' SOLID WITH RADOME	140'	1 5/8" HELIAX		

5.) TRANSMISSION LINES TO BE EQUALLY DISTRIBUTED ON (3) TOWER FACES.

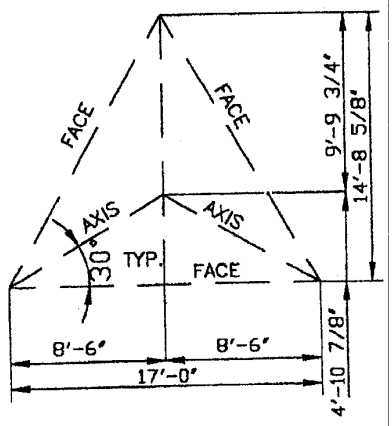

REACTIONS @ BASE

OTM: 6391.727 KIP. FT
COMP: 449.800 KIPS.
UPLIFT: 418.474 KIPS.
SHEAR: 59.068 KIPS.
WT: 46.987 KIPS.

Clearwire Proposed
TX-HOU0290
Elevation

3/13/09
Rev.
3/30/09

STATE OF TEXAS
LEO L. ROBERTS
61220
REGISTERED
PROFESSIONAL ENGINEER
4-23-99

NO	DATE	REVISION	BY

ALLIED TOWER 900 NORTH WILSON VINITA, OK. 74301 (918) 256-8761

190' SST
MIKE POLLAK
PEARLAND, TX.

DRAWN BY	DATE	JOB#
RGM	4-22-99	11728

DRAWING NO. B-20151

LESSOR Site Number & Name: TX-5021 Pearland #2
LESSEE Site Number & Name: TX-HOU0290 GTP TX-5021

EXHIBIT 3

Prime Agreement

N/A

LESSOR Site Number & Name: TX-5021 Pearland #2
LESSEE Site Number & Name: TX-HOU0290 GTP TX-5021

EXHIBIT 4

Description of LESSEE's Equipment

Please see attached approved Collocation Application

GLOBAL TOWER PARTNERS

Collocation Application

Check one:	New ☒ Addition to Existing ☐ Modification ☐		
PLEASE RETURN THIS APPLICATION TO: (E-MAIL IS PREFERRED)		GTP Site #:	TX-5021
GTP		GTP Site Name:	Pearland #2
1801 Clint Moore Rd	E-Mail: mprewit@gtpsites.com	GTP Date Received:	3/4/2009
Suite 110		Revision Dates:	3/13/09-rev.1/ rev. (2 rad center)
Boca Raton, FL 33487	Office: (512) 294-2345	RSM Approval:	DARRELL SCHNEIDER
Attn: Monty Prewit	Fax: (561) 995-0321		Pending Final SA

APPLICANT/CARRIER INFORMATION

Carrier Name:	Clearwire	Contact Name:	Juli Davis
Carrier Site Name:	GTP TX-5021	Contact Number:	(281) 580-4100
Carrier Site Number:	TX-HOU0290	Contact Fax:	(281) 580-4108
Carrier Legal Entity Name, State of registration:	Clear Wireless LLC, a Nevada Limited Liability Company	Contact Address:	13131 Champion Drive, Suite 208 Houston, Texas 77069
Type of entity (LP, LLC, Corp)	LLC		
d/b/a/ (If applicable)			
Notice Address for Lease:	4400 Carillon Pt., Kirkland, WA 98003	Contact E-mail:	juli.davis@powderriverdev.com
With copies to:		Additional E-mail:	
Carrier Invoice Address:	4400 Carillon Pt., Kirkland, WA 98003	Other:	
Carrier Invoice Contact - Name, Title, Phone No.	Nancy Sears, Real Estate (425) 216-4630	Carrier NOC#	

ADDITIONAL CARRIER INFORMATION

Leasing Contact Name/Number:	Juli Davis / (281) 580-4100
RF Contact Name/Number:	Keith Neff / (602) 502-6658
Construction Contact Name/Number:	Gary Oliphant / (281) 580-4100
Emergency Contact Name/Number:	Eric Tellier / (813) 267-1320 or NOC

SITE INFORMATION

Latitude:	N29	33	26.09	N	Existing Structure Type:	SST
Longitude:	W95	22	46.99	W	Existing Structure Height:	190'
Site Address:						

ANTENNA & COAX

Sector	1	2	3	Other (Dish, TMA, GPS)
Desired Rad Center (feet AGL)	115'	115'	115'	115'
Antenna Quantity	1	1	1	3
Antenna Manufacturer				Andrew
Antenna Model (Attach Spec Sheet)	Generic Panel Type	Generic Panel Type	Generic Panel Type	VHLP2-18-1WH
Weight (per antenna)	35 lbs	35 lbs	35 lbs	43 (includes ODU)
Antenna Dimensions	42" x 13" x 3"	42" x 13" x 3"	42" x 13" x 3"	26"
Quantity of Coax Cables PER ANTENNA	2- cat-5 cables	2- cat-5 cables	2- cat-5 cables	1
Diameter of Coax Cables PER ANTENNA	5/16	5/16	5/16	½"
Orientation/Azimuth (degrees from true north)	0	120	240	0, 120, 240
Mechanical Tilt (degrees)				
# Of Channels				
Antenna Mount Mounting Height (feet AGL)	176'	176'	176'	'
Antenna Mounting Type	T-Frame ☐ Sector ☐ Platform ☐ Low Profile ☒ Other: Pipe Mount			
Transmit Frequency	2500-2686 MHz	2500-2686 MHz	2500-2686 MHz	17700-17750 MHz, 19650-19700 MHz
Receive Frequency	2500-2686 MHz	2500-2686 MHz	2500-2686 MHz	17700-17750 MHz, 19650-19700 MHz
ERP (watts)	25 watts	25 watts	25 watts	100 Watts
Type of Service (i.e. Cellular, PCS, ESMR)	WiMax	WiMax	WiMax	WiMax

GROUND SPACE REQUIREMENTS

Total Ground Area Dimensions Required (length x width x height in ft.)	10ft x 18ft x10ft H'	Generator: ☐ Diesel ☐ Propane ☐ Natural Gas Pad Dimension (L X W, ft.):	
Cabinet Pad Dimensions	4'x 5'	Cabinet Manufacturer	DDB Unlimited
Shelter Pad Dimensions	N/A	Shelter Manufacturer	N/A

AC POWER REQUIREMENTS

Voltage:	240V AC Single Phase	Total Amperage:	50A Breaker, 25A Average Current

Rev 10/1/08

GLOBAL TOWER PARTNERS

Collocation Application

Comments:

Additional Tower Mounted Equipment Below

Sector			Other (Dish, TMA, GPS)	Other (Dish, TMA, GPS)
Desired Rad Center (feet AGL)			115'	115'
Antenna Quantity			3	3
Antenna Manufacturer			Motorola	Dragonwave
Antenna Model **(Attach Spec Sheet)**			DAP Vx	Airpair ODU/Horizon Compact
Weight (per antenna)			45lbs	Included in Microwave
Antenna Dimensions			26" x 14" x 9"	4.75" x 9.3" x 9.3"
Quantity of Coax Cables **PER ANTENNA**			2	NA
Diameter of Coax Cables **PER ANTENNA**			5/16"	NA
Orientation/Azimuth (degrees from true north)			0, 120, 240	0, 120, 240
Mechanical Tilt (degrees)				
# Of Channels				
Antenna Mount Mounting Height (feet AGL)			179'	179'
Antenna Mounting Type	T-Frame ☐ Sector ☐ Platform ☐ Low Profile ☒ Other: Pipe Mount			
Transmit Frequency			N/A	17700-17750 MHz, 19650-19700 MHz
Receive Frequency			N/A	17700-17750 MHz, 19650-19700 MHz
ERP (watts)			2 Watts	100 Watts
Type of Service (i.e. Cellular, PCS, ESMR)			WiMax	WiMax

_Rev.1
Noted cables per antenna and dishes and sizes,
Antenna length 48" to 42"
Revised azimuths
Revised Rad centers

Rev 10/1/08

Contact Information

Property Owner

GTP (Global Tower Partners)
Monty Prewit - Regional Manager
(512) 992-5361
mprewit@gtpsites.com

Applicant

Clear Wire
Mike Brogan - Director
3800 Buffalo Speedway, Suite 200
Houston, TX 77069
(214) 395-8702
mike.brogan@clearwire.com

Agent for Applicant

Powder River Development
Blake Griggs - Real Estate Manager
13131 Champions Drive, Suite 208
Houston, TX 77069
713-261-5357
Blake.Griggs@PowderRiverDev.com

Code Response 1

Tower Ordinance

Chapter 2 – Division 5: Telecommunications Towers & Antennas

Section 2.5.5.2 Conditional Use Permit Required

(e) **Application & Requirements.** An application for a conditional use permit for a tower, antenna, or use of an alternative tower structure must be made to the Planning Department. An application will not be considered until it is complete. A complete application must contain the following:

(1) An inventory of the applicant's existing towers that are either within the City or within one mile of the corporate limits, specifying the location, height, and design of each tower. The Planning Department may share the information with other applicants for a conditional use permit under this article.

APPLICANT DOES NOT HAVE ANY EXISTING TOWERS WITHIN THE CITY OR WITHIN ONE MILE. CLEARWIRE IS NEW TO THE HOUSTON MARKET AND DOES NOT CURRENTLY HAVE AN OPERATING NETWORK IN THIS AREA.

(2) Site plans to scale specifying the location of tower(s), transmission building and other accessory uses, street access, parking, fences, landscaped areas, and adjacent land uses.

ATTACHED TO CUP APPLICATION AS EXHIBIT E.

(3) A report from a professional structural engineer licensed in the State of Texas documenting the following:

a. Tower height and design, showing a cross-section of the tower structure.

b. Total anticipated capacity of the tower structure, including the number and types of antennas which can be accommodated.

ATTACHED AS SUPPLEMENT D. THE TOWER IS RATED AT 105%, WHICH IS DEEMED TO BE STRUCTURALLY ACCEPTABLE AS DEFINED BY THE CITY OF PEARLAND'S BUILDING CODE.

(4) A letter of intent to lease excess space on the tower and to lease additional excess land on the tower site when the shared use potential of the tower is absorbed, if structurally and technically possible.

CLEARWIRE IS SUBLEASING SPACE AND IS NOT THE TOWER OWNER. CLEARWIRE HAS NO ABILITY TO CONTROL ANY ADDITIONAL LEASE AREAS. THE GROUND SPACE AND TOWER STRUCTURE ARE APPROACHING CAPACITY. THERE ARE CURRENTLY 6 TENANTS AT THIS LOCATION. CLEARWIRE WOULD BE THE 7TH.

(5) Each applicant must make a good faith effort to substantially demonstrate that no existing towers could accommodate the applicant's proposed antenna by doing the following:

CLEARWIRE IS COLLOCATING ON AN EXISTING TOWER AND IS NOT BUILDING A NEW TOWER.

(6) Any other information which may be requested by the Planning Department to fully evaluate and review the application and the potential impact of a proposed tower or antenna.

Section 2.5.5.6 Shared Use

(a) **No Permit Required**. To encourage shared use of towers, no building permit or conditional use permit is required for the addition of antennas to an existing tower so long as the height of the tower or structure on which the antenna is placed is not increased and the requirements of this article are met.

IN SUPPORT OF THE CITY'S INTENT TO PREVENT THE PROLIFERATION OF UNNECESSARY TOWERS, CLEARWIRE HAS SOUGHT TO UTILIZE AS MANY EXISTING TOWERS AND STRUCTURES AS POSSIBLE. ALL OF THE PROPOSED SITES IN THE CITY LIMITS WILL BE COLLOCATIONS. THE HEIGHT OF THE TOWER IS NOT BEING INCREASED, NOR IS THE EXISTING SITE BEING EXPANDED.

Section 2.5.5.8 Pre-Existing Towers & Non-Conforming Uses.

(a) **Operative Towers**. All communications towers that are operative prior to the effective date of this UDC and that do not comply wholly with the requirements of this division are allowed to continue their present usage as a nonconforming use and are treated as a non-conforming use in accordance with Chapter 2, Article 7 of this UDC. Routine maintenance is permitted on the existing towers. Construction other than routine maintenance on an existing communication tower must comply with the requirements of this UDC.

CLEARWIRE'S INSTALLATION WILL FULLY COMPLY WITH THE RULES AND REGULATIONS AS DEFINED IN THE UDC.

Code Response 2

Zone District GC

Section 2.4.4.5 GC, General Commercial District

(a) **Purpose**. The General Commercial District (GC) is intended to permit a wide variety of businesses characterized by those uses that may require an extensive amount of land for the conduct of business and/or that may require outside storage areas.

(b) **Authorized Uses**. The following are authorized uses under the regulations established in this chapter:

(1) Permitted and conditional uses as authorized in the Land Use Matrix in Article 5, Division 2 of this Chapter 2;

THIS USE IS LISTED AS CONDITIONAL IN THE MATRIX.

(2) Accessory uses as authorized in Article 5, Division 3 of this Chapter 2.

(c) **Area Regulations**.

(1) Size of Lots:

a. *Minimum Lot Size* – Twenty-two thousand and five hundred (22,500) square feet in area.

b. *Minimum Lot Width* - One hundred and fifty feet (150').

c. *Minimum Lot Depth* - One hundred and twenty-five feet (125').

THE EXISTING SITE PRE-DATES THE ZONING ORDINANCE AND THIS APPLICATION IS NOT CREATING A NEW LOT.

(2) Size of Yards:

a. *Minimum Front Yard* - Twenty-five feet (25')

b. Minimum Side Yard

1. Ten feet (10'), except as provided below.
2. Twenty-five feet (25') if side yard abuts a residential zoning district or a public right-of-way.

c. *Minimum Rear Yard* - Twenty-five feet (25')

CLEARWIRE'S INSTALLATION WILL NOT ALTER THE SITE'S EXISTING SETBACKS.

(d) **Height Restrictions**. No building shall exceed forty-five feet (45') in height. Additional height may be approved through a Conditional Use Permit (CUP).

THE TOWER ORDINANCE (CH. 2, DIV. 5) CONTROLS HEIGHT OF TOWERS. THE EXISTING SITE PRE-DATES THE ZONING ORDINANCE.

(e) **Outdoor Activities or Uses**. In connection with any permitted use, there shall be allowed outdoor activities or uses subject to the following limitations:

(1) Except as provided below, out of doors display, storage and sale of merchandise, equipment and vehicles shall be permitted.

(2) Out of doors display, storage and sale of merchandise, equipment and vehicles shall not be permitted on property adjacent to a residential zoning district.
   a. Such activities/uses shall be permitted on such property upon City Council approval of a Conditional Use Permit (in accordance with Article2, Division 3 of this chapter) authorizing said activities/uses.
   b. Outdoor storage, as defined by Section 5.1.1.1, is allowed only upon obtaining a CUP and providing screening pursuant to Section 4.2.4.1 (d). In no case shall outdoor storage be permitted along any yard that abuts any street or public right-of-way.

NO RETAIL ACTIVITIES OR MERCHANDISING WILL TAKE PLACE AT THIS SITE. OUTDOOR STORAGE WILL NOT BE UTILIZED.

(f) **Fences & Screening**. Fences and screening shall be provided and maintained as set forth in Chapter 4, Article 2, Division 4 of this UDC.

PER SECTION 4.2.4.2. C - THIS INSTALLATION WILL NOT IMPACT MORE THAN 50% OF THE EXISTING AREA. CLEARWIRE'S FOOTPRINT IS 49 SQUARE FEET. THE EXISTING SITE IS OVER 3,000 SQUARE FEET.

(g) **Parking**. Parking and loading shall be provided in conformance with Chapter 4, Article 2, Division 1 of this UDC.

CLEARWIRE'S INSTALLATION DOES NOT CREATE A HABITABLE STRUCTURE OR OTHERWISE COMMERCIALLY USABLE SPACE.

(h) **Access**. Access shall be provided in accordance with the City's Engineering Design Criteria Manual (EDCM).

CLEARWIRE WILL UTILIZE THE EXISTING ACCESS.

(i) **Refuse Containers**. All refuse and refuse containers shall be screened from the view of adjacent public streets and from the view of any adjacent single-family, patio home, townhouse, and/or multiple-family development(s). Such containers shall not be located within the front yard area, and shall be to the side or rear of the lot.

NO REFUSE CONTAINERS WILL BE INSTALLED.

(j) **Adjacent to a Single-Family Use or Zoning District**. When a nonresidential development is established on a tract of land that is adjacent to a single-family development or to property zoned for single-family use, there shall be a twenty-five foot (25') wide landscaped buffer along the property line that is adjacent to such use or district. The landscaped buffer shall remain open and unobstructed (i.e., no parking, driveways, or other use of the buffer area), and shall be

planted with ground cover, such as grass or ivy. This landscaped buffer may be located with the required yard/setback area.

SITE IS NOT ADJACENT TO SINGLE FAMILY RESIDENTIAL DISTRICT.

Code Response 3

Site Development

Chapter 4 – Article 2: Development Standards

Division 2 Landscaping

Section 4.2.2.3 Applicability to New and Existing Developed Areas

(b) **Existing Development Areas; Nonconformance.**

(1) All property with existing development on the effective date of the ordinance from which this division derives which is not in compliance with this division shall be considered nonconforming and allowed to continue until the time a building permit is granted to reconstruct or enlarge an existing structure on the property to an extent exceeding five hundred (500) square feet of the exterior dimensions of the structure. At that time, this division shall apply to the previous existing parcel areas as well as any new paved areas, and the areas shall be brought into compliance. A plan showing existing and new development and the proposed landscaping shall be submitted in accordance with this division. In order to encourage early landscaping in existing paved areas and the preservation of trees that are already established and growing in these areas an additional credit shall be given in accordance with Division 3 of this Chapter.

(2) No structure existing on the effective date of this Code from which this division derives shall be required to be altered or moved in order to comply with this division except for reconstruction.

(3) Also see Article 1, Division 3 of this Chapter for further requirements related to structural and parking-related expansions.

1. CLEARWIRE'S PROPOSED INSTALLATION IS LESS THAN 500 SQUARE FEET, THUS THE EXISTING DEVELOPMENT IS NOT REQUIRED TO BE BROUGHT INTO COMPLIANCE.
2. THE TOWER IS NOT BEING RECONSTRUCTED AND WAS BUILT PRIOR TO THIS CODE'S EFFECTIVE DATE.

Division 3 – Tree Mitigation

Section 4.2.3.3 Approval Required for Tree Removal

No person directly or indirectly shall cut down remove, move, or destroy through damaging the roots, trunk or canopy, any tree situated on property regulated by this division without first submitting a Tree Survey and obtaining approval of a Tree Disposition Plan, unless otherwise exempted by the provisions of Section 4.2.3.4(b) of this division.

NO TREES WILL BE IMPACTED BY THIS INSTALLATION, AS THE COMPOUND ALREADY EXISTS. THIS INSTALLATION WILL NOT ENLARGE THE EXISTING FACILITY.

Section 4.2.3.6 Submittal Requirements

(a) The City Manager or his/her designee shall establish administrative procedures necessary to facilitate the implementation and enforcement of this division. These procedures shall include the following:

(1) Tree Disposition Plan/Tree Survey: Must be submitted and approved prior to the removal or destruction of any tree.

(2) An application involving a limited portion of a site may be based on an exhibit showing only that portion of the site.

(3) Aerial photograph interpretation may supplant the ground survey for preliminary analyses of large scale developments, such as subdivisions, utility corridors, and golf courses, at the discretion of the City. Large-scale developments are also required to include impact areas where existing trees are located.

NO TREES WILL BE REMOVED AS A RESULT OF THIS INSTALLATION.

Division 4 – Screening and Fencing

Section 4.2.4.2 Screening for Utility Support Structures and Stations

(a) **Applicability.** This section shall apply to all utility support structures or stations located on private property regardless if there is an easement or other form of agreement between the utility company or property owner.

(b) **Support Structures and Stations Defined.** These shall include, but not be limited to, any switching equipment, lift stations, pipe valves connected to pipes above ground, boxes or cabinets, cabling equipment or wiring above ground, transmitting equipment, control rooms, control cabinets, etc. Utility poles and transformers and like appurtenances attached to utility poles more than ten feet (10') above the ground are not considered a support structure or station.

(c) **Regulations.** A utility support structure or station located on private property or outside a public street right of way must have proper screening. The construction or modification of an existing utility support structure or station equal to more than fifty percent (50%) of its value or area, must provide screening meeting one of the following:

THIS INSTALLATION WILL NOT IMPACT MORE THAN 50% OF THE EXISTING AREA. CLEARWIRE'S FOOTPRINT IS 49 SQUARE FEET. THE EXISTING SITE IS OVER 3,000 SQUARE FEET.